NOTE:
THE PUMP CHAMBER, RISERS, AND COVERS SHALL BE RATED TO CARRY AN AASHTO H-10 VEHICLE LOAD.

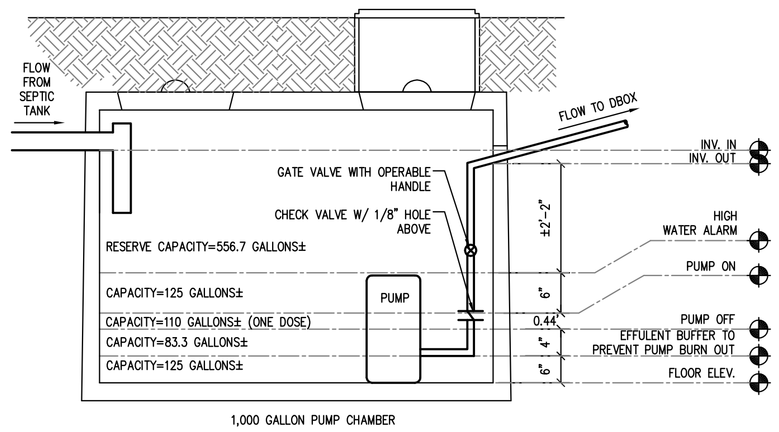

PROPOSED PUMP CHAMBER DETAIL & NOTES

SCALE: 1/2"=1'-0"

PUMP STATION NOTES:
1. PUMP CHAMBER SHALL BE A 1,000 GALLON REINFORCED CONCRETE TANK AS IN WACHUSETT PRECAST MODEL CST-1000 OR EQUAL. METAL BASINS WILL NOT BE ACCEPTED.
2. THE PUMP CHAMBER SHALL HAVE A INTERIOR FLOOR AREA OF ±33 S.F AND SHALL HAVE A MINIMUM 4FT LIQUID DEPTH..
3. THE PUMP CHAMBER SHALL BE CAPABLE OF WITHSTANDING A H-10 WHEEL LOADING UNDER THE PROPOSED SOIL OVERBURDEN.
4. THE TANK SHALL BE EQUIPPED WITH ONE SINGLE PHASE, SIMPLEX EFFLUENT PUMP AS IN LIBERTY LE-100 MODEL (OR APPROVED EQUAL). PUMP SHALL PUMP AT A RATE OF 20 GALLONS PER MINUTE AT A HEAD OF APPROXIMATELY 28.3 FEET. CONTRACTOR SHALL ENSURE THAT THE PUMP CAN PHYSICALLY FIT INTO THE PUMP CHAMBER. THE CONTRACTOR SHALL CLOSE THE GATE VALVE (AS NECESSARY) TO LIMIT THE FLOW THROUGH THE DISCHARGE TO THE DESIGN FLOW.
5. CONTRACTOR SHALL ENSURE THAT THE PUMP STATION IS COMPLETELY WATERTIGHT.
6. PUMP SHALL BE EQUIPPED WITH CONTROL SYSTEM WHICH CAUSE PUMP TO OPERATE UPON SENSING "PUMP ON LEVEL" AND SHUTS PUMP OFF UPON SENSING "PUMP OFF LEVEL", AND SHALL PROVIDE A LOW AND HIGH LEVEL ALARM DETECTION AND ANNUNCIATION SYSTEM.
7. ALARM CONDITION SHALL BE ENUNCIATED BY A FLASHING LIGHT AND AN AUDIBLE SIGNAL INSIDE OF THE BUILDING, AND SHALL BE ON A SEPARATE ELECTRICAL CIRCUIT.
8. A SIGN SHALL BE MOUNTED ADJACENT TO THE FLASHING LIGHT AND AUDIBLE SIGNAL STATING THAT THE ALARM CONDITION IS A RESULT OF THE WASTEWATER EFFLUENT PUMP FAILURE.
9. A LICENSED ELECTRICIAN SHALL INSTALL THE POWER SUPPLY TO THE PUMPS STATION, WITH A SEPARATE CIRCUIT IN THE BUILDING ELECTRICAL SYSTEM, AND SHALL INSTALL ALL WIRING, CONTROL, AND ALARM CONNECTIONS. ALL ELECTRICAL WORK AND MATERIALS SHALL CONFORM TO THE LOCAL, STATE, AND NATIONAL ELECTRICAL CODES AND THE RECOMMENDATIONS OF THE MANUFACTURER.
10. DISCHARGE PIPE SHALL HAVE A 1/8 INCH HOLE DRILLED ABOVE THE CHECK VALVE TO ENABLE THE FORCE MAIN TO DRAIN.
11. PUMP STATION ELECTRICAL PANEL SHALL BE LOCATED INSIDE OF THE BUILDING OR AT THE DISCRETION OF THE BUILDING OWNER.
12. PUMPS SHALL BE EQUIPPED WITH A HANGER PIPE FOR PUMP REMOVAL.
13. PROVIDE A CONCRETE RISER TO BRING THE ACCESS COVER TO GRADE.

NOTES:
1 SEPTIC TANK, PUMP CHAMBER, AND DIST. BOX TO BE PLACED ON A LEVEL & STABLE BASE THAT HAS BEEN COMPACTED BY A VIBRATORY COMPACTOR OR EQUAL.
2. MIN. 4'-0" ELEV. REQUIRED BETWEEN BOTTOM OF LEACHING AREA AND MAX. G.W. ELEV.
3. THE DESIGN ELEVATIONS INDICATED WILL PROVIDE AT LEAST THESE MINIMUM SLOPES FOR THE LENGTHS INDICATED ON PLAN. IF ANY COMPONENT OF THE SYSTEM IS MOVED, THE DESIGN ELEVATIONS MAY NOT PROVIDE ADEQUATE SLOPE.
4. ALL SYSTEM COMPONENTS SHALL BE MARKED WITH MAGNETIC TAPE OR A COMPARABLE MEANS IN ACCORDANCE WITH 310 CMR 15.221(12).

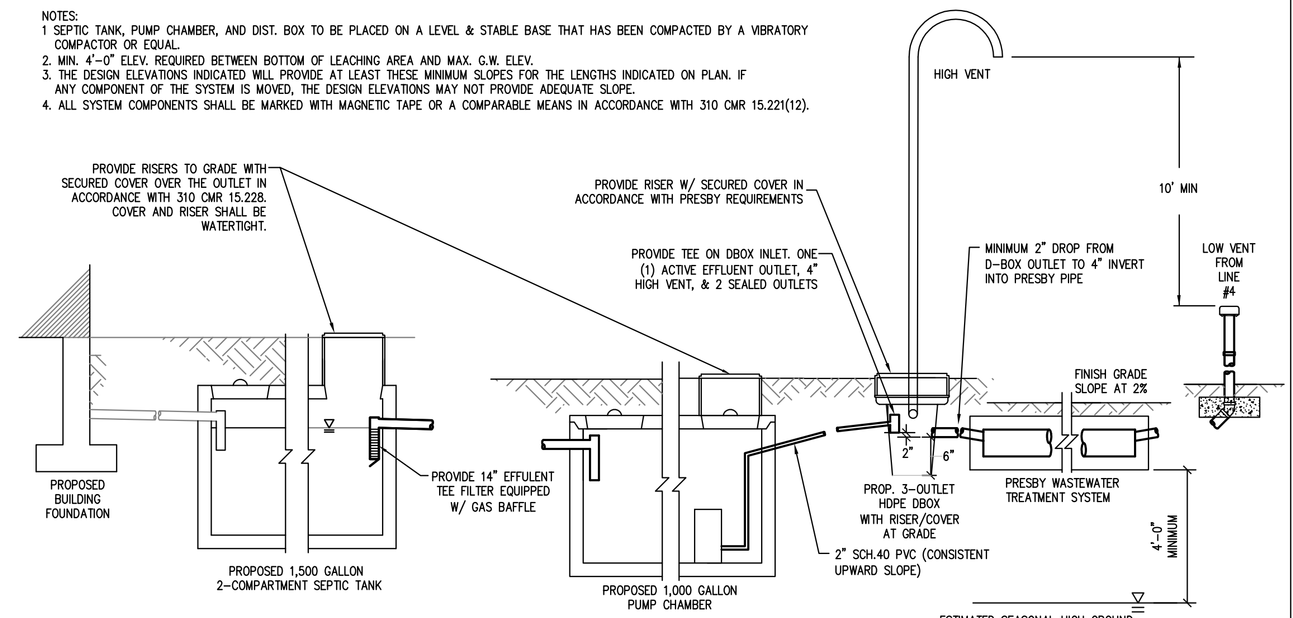

PROPOSED SEPTIC SYSTEM PROFILE

SCALE: NOT TO SCALE

PRESBY LEACHING SYSTEM NOTES:

1. INSTALLATION, MAINTENANCE, MONITORING, REPORTING, ETC. SHALL BE IN ACCORDANCE WITH THE REMEDIAL USE CERTIFICATION ISSUED BY DEP DATED SEPTEMBER 26, 2014 AND IN ACCORDANCE WITH THE MANUFACTURER'S SPECIFICATIONS.
2. MASS DEP AND PRESBY REQUIRE ALL DESIGNERS AND INSTALLERS TO BE CERTIFIED. SYSTEM TO BE INSTALLED IN ACCORDANCE WITH PRODUCT DESIGN AND INSTALLATION MANUAL, STATE AND LOCAL REGULATIONS. FOR PRODUCT INFORMATION OR THE NEAREST DEALER CONTACT PRESBY.
3. INSTALLERS OF PRESBY SYSTEMS SHALL PROVIDE OWNER, MANUFACTURER, AND THE LOCAL APPROVING AUTHORITY WITH A COPY OF A COMPLETED "SYSTEM INSTALLATION REPORT FORM" FOR EACH NEW OR REMEDIAL SYSTEM INSTALLED.
4. ALL SYSTEMS SHALL BE DESIGNED AND INSTALLED USING DISTRIBUTION BOXES AS INSPECTION PORTS. THE OUTLET OF THE D-BOX SHALL BE AT LEAST 2" ABOVE THE INLET OF THE HIGHEST PRESBY LINE WITH THE CONNECTING PIPE SLOPE NOT LESS THAN 2%.
5. THE MINIMUM TOTAL DEPTH OF COVER ON PRESBY LINES IS 10": 6" OF SYSTEM SAND PLUS 4" OF TOPSOIL. PRESBY PIPES WITH 12" OF STRUCTURAL COVER IS DESIGNED FOR H-10 LOADING, AND PRESBY PIPE WITH 18" OF STRUCTURAL COVER IS DESIGNED FOR H-20 LOADING.
6. THE USE OF PRESSURE DISTRIBUTION LINES IN PRESBY WASTEWATER TREATMENT SYSTEMS IS PROHIBITED.
7. SYSTEMS INCORPORATING PUMPS TO GAIN ELEVATION MUST USE DIFFERENTIAL VENTING AND VELOCITY REDUCTION TO CONTROL LIQUID FLOW. VELOCITY REDUCTION MAY BE ACCOMPLISHED THROUGH THE USE OF A DISTRIBUTION BOX WITH A TEE OR 90° ELBOW AT THE FORCE MAIN OUTLET.
8. EACH PRESBY SYSTEM MUST BE INSTALLED WITH VENTING AT THE END OF EACH D-BOX LINE, SECTION OR SERIAL BED. VENT MANIFOLDS MAY BE USED TO CONNECT MULTIPLE VENTS TO ONE VENT OUTLET.
9. EFFLUENT TEE FILTERS WILL NOT BE REQUIRED FOR SEPTIC TANKS USED IN GRAVITY PRESBY SYSTEMS.
10. PRESBY SYSTEMS MAY BE INSTALLED IN AN AREA UP TO 40% SMALLER THAN A CONVENTIONAL TITLE 5 BED DESIGNED IN ACCORDANCE WITH 310 CMR 15.252. CURRENTLY MASSACHUSETTS LIMITS ALL SYSTEMS TO A MINIMUM BED SIZE OF 400 SF.
11. ALL CONFIGURATIONS OF PRESBY SYSTEM REQUIRE A MINIMUM OF 6" OF SYSTEM SAND SURROUNDING THE CIRCUMFERENCE OF THE PIPE, AND 12" OF SAND BEYOND ALL PIPE ENDS AND THE OUTER PIPE ROWS (FIRST & LAST). ASTM STANDARD: C-33 (CONCRETE SAND) MEETS THE REQUIREMENTS FOR SYSTEM SAND.
12. SAND BEDS SLOPING 10% OR LESS REQUIRE THE SYSTEM SAND AREA TO EXTEND A MINIMUM OF 1 FOOT AROUND THE PERIMETER OF THE PRESBY PIPE. (SEE EFFLUENT DISPOSAL AREA CROSS SECTION DETAIL).
13. SAND BEDS SLOPING GREATER THAN 10% REQUIRE THE SYSTEM SAND AREA TO EXTEND A MINIMUM OF 1 FOOT AROUND THE PERIMETER OF THE PRESBY PIPE PLUS AN ADDITIONAL 3 FOOT EXTENSION SHALL BE PROVIDED ON THE DOWNSLOPE SIDE. (SEE EFFLUENT DISPOSAL AREA CROSS SECTION DETAIL).
14. A COMBINATION DISTRIBUTION IS REQUIRED FOR SYSTEMS WITH GREATER THAN 500GPD. TO PREVENT MOVEMENT, BE SURE DISTRIBUTION BOX IS PLACED ON A STABLE SOIL BASE OR CONCRETE PAD.
15. ALL DISTRIBUTION BOXES THAT DIVIDE EFFLUENT FLOW IN PUMP OR GRAVITY SYSTEMS REQUIRE FLOW EQUALIZERS IN THEIR OUTLETS. MOST FLOW EQUALIZERS ARE LIMITED TO A MAXIMUM OF 10 GALLONS/MINUTE IN GRAVITY SYSTEMS AND 20 GALLONS/MINUTE IN PUMPED SYSTEMS.
16. DO NOT INSTALL SYSTEM ON FROZEN GROUND OR LEAVE SYSTEM UNCOVERED FOR EXTENDED PERIODS OF TIME.

LOCAL UPGRADE APPROVAL REQUESTS

LESS THAN 100' PROVIDED FROM SAS TO ABUTTER'S WELL
LESS THAN 50' PROVIDED FROM SEPTIC TANK & PUMP CHAMBER TO PROPOSED ON-SITE WELL
LESS THAN 50' FROM THE PROPOSED ON-SITE WELL TO A BODY OF WATER
LESS THAN 50' FROM THE PROPOSED ON-SITE WELL TO A BUILDING SEWER

CONSTRUCTION SEQUENCE:

1. INSTALL THE PROPOSED EROSION CONTROLS AND REQUEST INSPECTION FORM CONSERVATION COMMISSION.
2. CLEAR AND GRUB TO ACCOMMODATE THE PROPOSED WORK
3. STRIP TOP SOIL AND STOCK PILE AS INDICATED. EXCESS MATERIAL SHALL BE REMOVED FROM THE SITE AND DISPOSED OF IN A LEGAL MANNER.
4. THE FOLLOWING MAY TAKE PLACE SIMULTANEOUSLY.
   A. PROPOSED BUILDING CONSTRUCTION.
   B. PROPOSED SEPTIC SYSTEM CONSTRUCTION
   C. PROPOSED DRIVEWAY CONSTRUCTION
   D. INSTALL PROPOSED UTILITIES
   E. SITE GRADING & FINISH GRADING
5. STABILIZE THE SITE WITH LOAM AND SEED.
6. REMOVE THE PROPOSED EROSION CONTROLS.

NOTES:

1. PROPERTY INFORMATION:

OWNER:	POWELL FAMILY IRREVOCABLE TRUST
ADDRESS:	44 PINE POINT ROAD
ASSESSORS REF.	U01-0120
DEED REF.	BOOK 56791 PAGE 316

2. THERE ARE NO RESOURCE AREAS WITHIN 50' OF THE PROPOSED SYSTEM.
3. THE SITE DOES NOT LIE WITHIN AN AREA OF OUTSTANDING RESOURCE WATER
4. THE SITE DOES NOT LIE WITHIN A ZONE A SURFACE WATER PROTECTION AREA.
5. THE PROPERTY DOES NOT FALL WITHIN A FLOOD HAZARD ZONE AS INDICATED IN NFIP FIRM COMMUNITY PANEL 25017C0342F.
6. NO PORTION OF THE SITE FALLS WITHIN A MAPPED ESTIMATED HABITAT OF RARE WILDLIFE AND WITHIN A PRIORITY HABITAT OF RARE SPECIES.
7. THE SITE IS NOT LOCATED WITHIN A MAPPED PRIMARY OR SECONDARY ZONE SUBJECT TO JURISDICTION UNDER THE MASSACHUSETTS WATERSHED PROTECTION ACT (SEE 350 CMR 11.00 ET SEQ.)

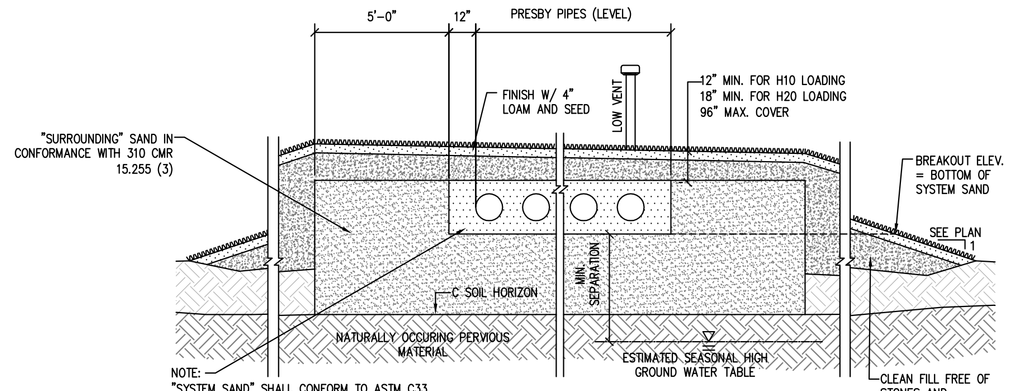

NOTE:
"SYSTEM SAND" SHALL CONFORM TO ASTM C33
"SYSTEM SAND" PLACED 6" ABOVE AND BELOW THE PRESBY PIPE LINES AND BETWEEN AND 1' BEYOND THE LIMITS OF THE PIPES

PRESBY ENVIRO-SEPTIC WASTEWATER TREATMENT SYSTEM SECTION

SCALE: 1/4"=1'-0"

NOTES:

GRANT OF TITLE 5 BEDROOM COUNT DEED RESTRICTION IS REQUIRED FOR THE PROPOSED TWO BEDROOM HOUSE.

ZONING RELIEF FROM BUILDING SETBACKS IS NECESSARY FOR THE CONSTRUCTION OF THE PROPOSED HOUSE AND GARAGE.

BOARD OF HEALTH VARIANCES FROM MINIMUM SETBACK REQUIREMENTS ARE REQUIRED FOR THE LOCATION OF THE PROPOSED WELL.

CONSERVATION COMMISSION APPROVAL IS REQUIRED FOR ALL WORK WITHIN 100FT OF THE RESOURCE AREA.

RETAINING WALS DESIGN BY OTHERS.

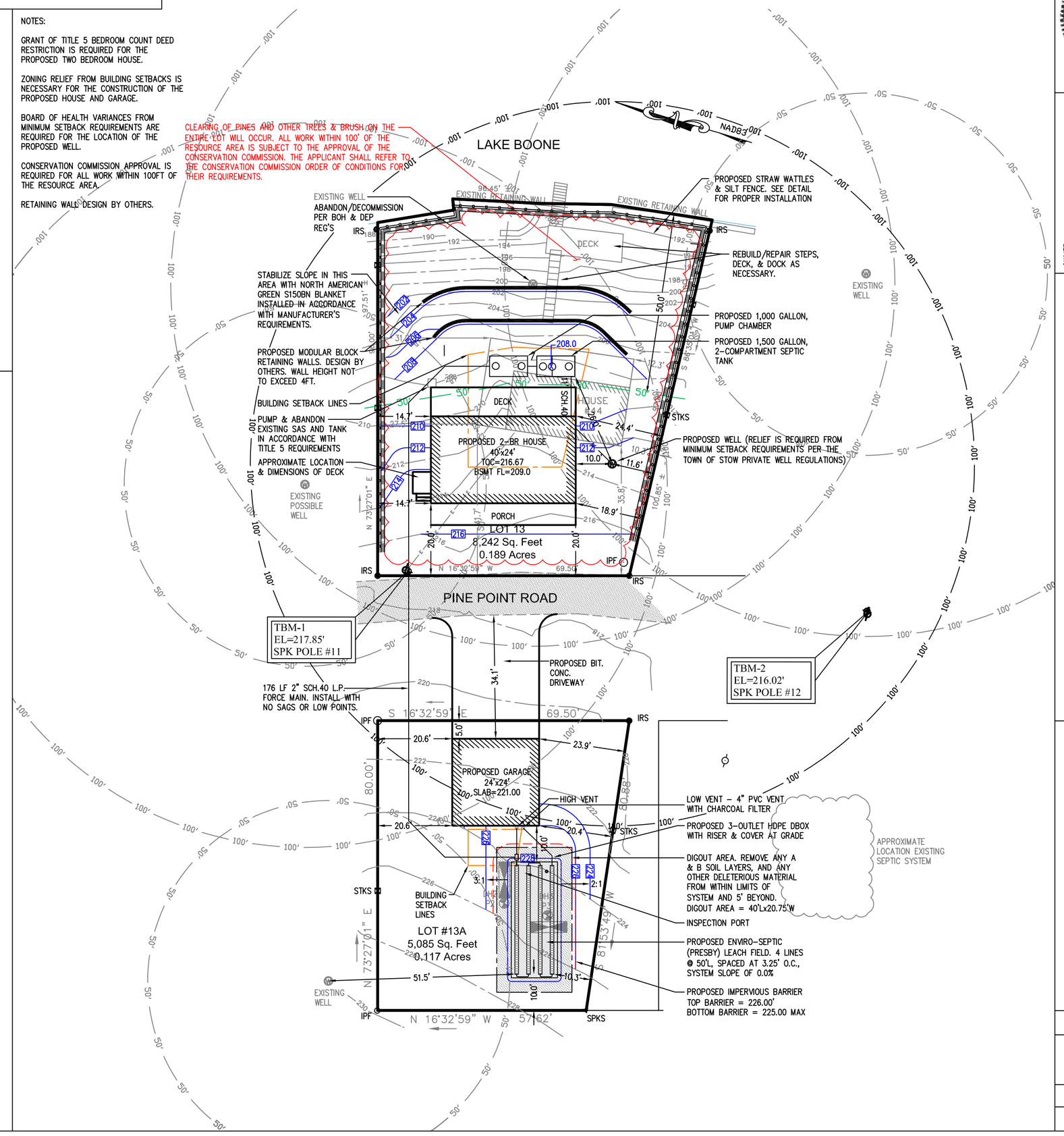

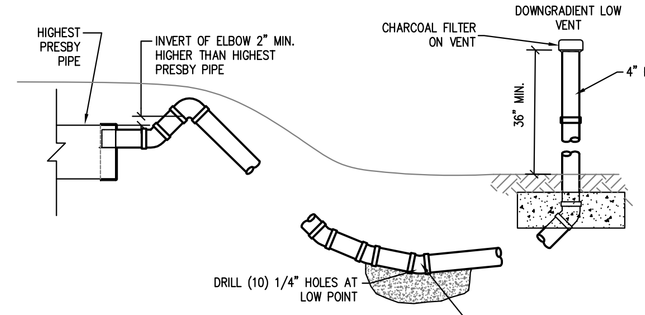

ALTERNATE DOWN-GRADIENT REMOTE VENTING DETAIL

SCALE: NOT TO SCALE

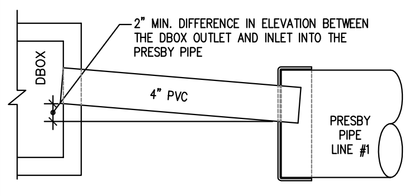

D-BOX CONNECTION DETAIL

SCALE: 1"=1'-0"

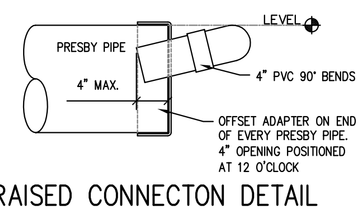

RAISED CONNECTON DETAIL

SCALE: NOT TO SCALE

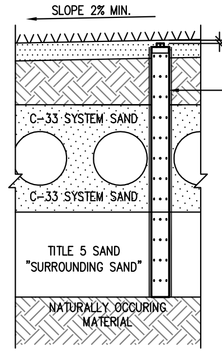

NOTE:
1. PROVIDE ONE OBSERVATION PORT WITHIN THE LEACHING AREA.
2. THE OBSERVATION PORT SHALL CONFORM TO 310 CMR 15.240(13).

PROP. OBSERVATION PORT SECTION

SCALE: 1/2"=1'-0"

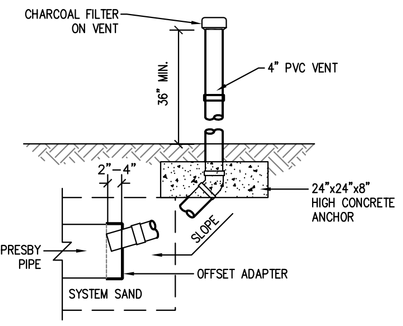

LOW VENT DETAIL

SCALE: NOT TO SCALE

GENERAL NOTES:

1. THE CONTRACTOR SHALL:
   A. BE RESPONSIBLE TO COORDINATE HIS WORK WITH MUNICIPALITY TO LIMIT THE POTENTIAL DISRUPTIONS TO THE THE GENERAL PUBLIC.
   B. EMPLOY DUE CARE AND CAUTION TO PROTECT THE PUBLIC FROM DANGERS ASSOCIATED WITH THE OPERATION.
   C. INSTALL TEMPORARY FENCES, BARRICADES AND SIGNAGE TO ENSURE THAT NO PERSONS ENTER THE WORK AREA.
   D. CONTRACTOR SHALL COORDINATE WITH THE TOWN DEPARTMENTS AS REQUIRED FOR WORK TO BE CONDUCTED IN THE STREET.
   E. EMPLOY DUE CARE WHEN WORKING AROUND PEDESTRIAN AND VEHICLE TRAFFIC.
2. THE CONTRACTOR SHALL RECORD AND PROVIDE THE OWNER WITH AS-BUILT LOCATIONS OF ALL UTILITIES INSTALLED AS PART OF HIS/HER WORK, INCLUDING UTILITIES NOT INDICATED ON PLAN (I.E. GAS, CABLE TV, TELEPHONE, ELECTRIC, ETC.).
4. CONTRACTOR SHALL CONTROL AIRBORNE DUST WITH USE OF SPRAYED WATER AS REQUIRED TO MINIMIZE IMPACT ON NEIGHBORING PROPERTIES. USE OF CALCIUM CHLORIDE OR OTHER CHEMICALS IS NOT PERMITTED.
6. THE CONTRACTOR SHALL BE RESPONSIBLE TO ENSURE THAT THE PROPOSED CONSTRUCTION ACTIVITIES DO NOT DAMAGE OR UNDERMINE EXISTING SLOPES, BUILDINGS, WALLS, STRUCTURES, ETC. IN THE AREA AROUND THE CONSTRUCTION. REPAIR OF EXISTING SLOPES, BUILDINGS, WALLS, STRUCTURES, ETC. THAT ARE DAMAGED OR UNDERMINED BY THE CONTRACTORS WORK SHALL BE THE RESPONSIBILITY OF THE CONTRACTOR.
7. EXISTING UTILITY LOCATIONS ARE APPROXIMATE AND ARE TO BE FIELD VERIFIED. QUINN ENGINEERING, INC. DOES NOT WARRANT THAT ALL EXISTING UTILITIES HAVE BEEN INDICATED. THE CONTRACTOR IS RESPONSIBLE FOR COORDINATING THE EXISTING UTILITY LOCATIONS AND ENSURING THAT THE PROPOSED WORK DOES NOT CONFLICT WITH ANY EXISTING UTILITIES NOT SHOWN.
8. THE CONTRACTOR SHALL REMOVE ALL TOPSOIL AND SUBSOIL PRIOR TO PLACING ANY FILL ON-SITE. WHERE GRAVEL IS CALLED FOR ON-SITE, CONTRACTOR MAY UTILIZE ON-SITE MATERIALS IF APPROVED BY THE OWNER.
11. ALL AREAS DISTURBED BY THE PROPOSED WORK SHALL BE STABILIZED. CONTRACTOR SHALL PLACE A MINIMUM OF 6" LOAM AND GRASS SEED IN ALL AREAS NOT SUBJECT TO RESTORATION BY ANY OTHER MEANS.
12. ALL SLOPES WHERE INDICATED THE PLAN SHALL BE STABILIZED WITH NORTH AMERICAN GREEN S150BN EROSION CONTROL BLANKET. BLANKET SHALL BE BIODEGRADABLE AND SHALL BE INSTALLED PER THE MANUFACTURER'S SPECIFICATION UNLESS OTHERWISE SPECIFIED ON PLAN. ALL SLOPES STEEPER THAN 3:1 SHALL BE STABILIZED LIKEWISE WHETHER NOTED OR NOT.
13. SUITABLE FILL SHALL CONSIST OF MATERIAL SOIL FREE OF ORGANIC MATERIALS, LOAM, AND ANY DELETERIOUS MATERIALS. SUITABLE FILL SHALL NOT CONTAIN STONES LARGER THAN 10" IN ANY DIMENSION, AND SHALL HAVE LESS THAN 75% PASSING THE NO. 4 SIEVE AND A MAXIMUM OF 20% PASSING THE NO. 200 SIEVE. SUITABLE FILL SHALL NOT CONTAIN ANY BUILDING RUBBLE, GRANITE, OR CONCRETE BLOCK, ROOFING MATERIALS, OR OTHER CONSTRUCTION REFUSE. AT THE TIME OF PLACEMENT SUITABLE FILL SHALL NOT CONTAIN FROST, SNOW, OR ICE AND SHALL NOT CONTAIN WATER GREATER THAN THE OPTIMAL MOISTURE CONTENT.
14. ANY CONDITIONS RENDERED BY THE ZONING BOARD OF APPEALS, BOARD OF HEALTH, CONSERVATION COMMISSION IN THE APPROVAL PROCESS ARE HEREBY MADE PART OF THIS WORK.
15. THE GROUND IMMEDIATELY ADJACENT TO FOUNDATIONS SHALL BE SLOPED AWAY FROM THE BUILDING, IN ACCORDANCE WITH THE MA STATE BUILDING CODE.
16. THE CONTRACTOR SHALL OBTAIN ALL NECESSARY TRENCH PERMITS IN ACCORDANCE WITH 520 CMR 14.00.

SYSTEM NOTES:

1. PRIOR TO BEGINNING CONSTRUCTION, THE CONTRACTOR SHALL CONTACT THE ENGINEER TO VERIFY THAT THE CONSTRUCTION PLANS ARE THE MOST CURRENT REVISION.
2. ALL MODIFICATIONS TO THIS PLAN MUST BE PRE APPROVED IN WRITING BY THE DESIGN ENGINEER AND THE LOCAL BOARD OF HEALTH, ZONING BOARD, BUILDING DEPARTMENT & CONSERVATION COMMISSION.
3. ALL CONSTRUCTION METHODS AND MATERIALS SHALL CONFORM WITH THE LOCAL BOARD OF HEALTH AND THE STATE ENVIRONMENTAL CODE TITLE 5 (310 CMR 15.000) & THE MANUFACTURER'S SPECIFICATIONS.
4. SEVENTY TWO HOURS PRIOR TO COMMENCING ANY EXCAVATION, THE CONTRACTOR SHALL NOTIFY DIG-SAFE AT 811. THE CONTRACTOR SHALL COORDINATE INSTALLATION OF NEW UTILITIES WITHIN THE VICINITY OF EXISTING UTILITIES (UNDERGROUND AND OVERHEAD) WITH THE APPROPRIATE UTILITY PROVIDER.
5. EXISTING UTILITY LOCATIONS ARE APPROXIMATE ARE TO BE FIELD VERIFIED. QUINN ENGINEERING, INC. DOES NOT WARRANT THAT ALL EXISTING UTILITIES HAVE BEEN INDICATED. THE CONTRACTOR IS RESPONSIBLE FOR COORDINATING THE EXISTING UTILITY LOCATIONS AND ENSURING THAT THE PROPOSED WORK DOES NOT CONFLICT WITH THE EXISTING UTILITIES (SHOWN OR NOT SHOWN).
6. THE SYSTEM WAS NOT DESIGNED TO FACILITATE A GARBAGE DISPOSAL OR WATER CONDITIONING/SOFTENING SYSTEMS..
7. A SURVEYOR REGISTERED IN THE COMMONWEALTH OF MASSACHUSETTS SHALL STAKE OUT THE SYSTEM LOCATION AND SHALL PROVIDE AS-BUILT LOCATION AND ELEVATIONS TO QUINN ENGINEERING, INC. THE INSTALLER SHALL NOT COVER THE SYSTEM OR PIPING UNTIL QUINN ENGINEERING, INC. VERIFIES FROM THE AS-BUILT INFORMATION PROVIDED THAT THE SYSTEM LOCATIONS AND ELEVATIONS ARE SUITABLE.
8. ALL PORTIONS OF THE FILL, A AND B SOIL HORIZONS SHALL BE REMOVED FROM WITHIN THE LIMITS OF THE LEACHING FACILITY AND FOR A DISTANCE OF FIVE FEET IN ALL DIRECTIONS THEREFROM,(310 CMR 15.255 (5)). (SEE DEEP HOLE DATA FOR SOIL HORIZON INFORMATION.)
9. WHERE A SEWAGE DISPOSAL SYSTEM IS TO BE CONSTRUCTED IN FILL, THE FILL SHALL BE PLACED AND COMPACTED IN 12 INCH LIFTS OR ALLOWED TO SETTLE FOR A MINIMUM OF ONE YEAR. THE FILL MATERIAL MUST CONFORM WITH THE LOCAL BOARD OF HEALTH AND STATE ENVIRONMENTAL CODE TITLE 5 SECTION 15.255.
10. ALL INTERIOR PLUMBING SHALL BE CONNECTED TO PROPOSED LEACHING FACILITY WITH THE EXCEPTION OF WATER SOFTENING OR CONDITIONING SYSTEMS, BACKWASH FROM FILTRATION SYSTEMS, OR FLOOR DRAINS.
11. THE INSTALLER SHALL SUBMIT TO THE ENGINEER A GRADATION ANALYSIS FOR THE FILL WITHIN THE SYSTEM TO DEMONSTRATE CONFORMANCE WITH 310 CMR 15.255(3) FOR "TITLE 5 FILL" & CONFORMANCE WITH THE MANUFACTURER'S SPECIFICATIONS FOR THE "SYSTEM SAND" PRIOR TO PLACING THE FILL.
12. THE SYSTEM INSTALLATION SHALL BE INSPECTED BY THE LOCAL BOARD OF HEALTH AT THE MILESTONES AS DETERMINED BY THE LOCAL BOARD OF HEALTH.
13. THE INSTALLER SHALL NOTIFY QUINN ENGINEERING, INC. AT LEAST 24 HOURS IN ADVANCE OF REQUESTING INSPECTIONS. QUINN ENGINEERING, INC. SHALL CONDUCT INSPECTIONS AT THE FOLLOWING MILESTONES:
   A. EXCAVATION COMPLETE - PRIOR TO PLACING FILL
   B. INSTALLATION OF PIPING
   C. FINISH GRADING COMPLETE
   D. COMPLETE STABILIZATION
14. ALL SYSTEM PIPING SHALL BE MARKED WITH MAGNETIC MARKING TAPE IN ACCORDANCE WITH 310 CMR 15.221 (12).
15. THE SYSTEM OWNER SHALL HAVE A SEPTAGE HANDLER, LICENSED BY THE LOCAL BOARD OF HEALTH, PUMP THE SEPTIC TANK IN ACCORDANCE WITH 310 CMR 15.351. ALL COMPONENTS OF THE SYSTEM SHALL BE MAINTAINED IN ACCORDANCE WITH 310 CMR 15.351, THE SYSTEM MANUFACTURER'S REQUIREMENTS OR OTHER APPLICABLE SECTION OF 310 CMR 15.
16. MACHINERY WHICH MAY CRUSH OR DISTURB THE PIPE SHALL NOT BE ALLOWED ON THE DISPOSAL AREA.
17. THE CONSTRUCTION OF PERMANENT STRUCTURES UPON THE DISPOSAL SYSTEM AND/OR RESERVE AREA IS NOT ALLOWED.

DIG SAFE DIAL-811

NO.	REVISION	DATE

KEVIN J. QUINN CIVIL #43922

OWNER:
FRANS & MARY JANE CRAMER
57 FLINT DRIVE
MARLBOROUGH, MA 01752

APPLICANT:
FRANS & MARY JANE CRAMER
57 FLINT DRIVE
MARLBOROUGH, MA 01752

PROPOSED SUBSURFACE SEWAGE DISPOSAL SYSTEM REPAIR PLAN
IN STOW, MA
44 PINE POINT ROAD

SCALE: 1" 20'

QUINN ENGINEERING, INC.
P.O. Box 107
Paxton, Massachusetts 01612
(508)753-7999 Fax:(508)795-0939

DATE: FEBRUARY 7, 2020

PROPOSED SUBSURFACE SEWAGE DISPOSAL SYSTEM REPAIR PLAN

44 POINT POINT ROAD

SHEET 1 OF 2