DEFINITIVE SUBDIVISION PLAN

JILLIAN'S LANE

STOW, MASSACHUSETTS

LOCUS MAP

SCALE: 1"=1,200'±

SHEET INDEX

SHEET NUMBER	SHEET TITLE	REVISION DATE
SHEET 1	TITLE SHEET	12/6/16
SHEET 2	LEGEND, NOTES AND SPECIFICATIONS	12/6/16
SHEET 3	EXISTING CONDITIONS	12/6/16
SHEET 4	LOT LAYOUT PLAN	12/6/16
SHEET 5	PROFILE SHEET	12/6/16
SHEET 6	GRADING SHEET	12/6/16
SHEET 7	EROSION CONTROL PLAN	12/6/16
SHEET 8	DETAIL SHEET	12/6/16
SHEET 9	DETAIL SHEET	12/6/16
SHEET 10	DETAIL SHEET	12/6/16
SHEET 11	ROAD IMPROVEMENT	12/6/16

COPYRIGHT DUCHARME & DILLIS CIVIL DESIGN GROUP, INC 2016

GREGORY S. ROY CIVIL No. 49079 — 1/12/17

PROFESSIONAL ENGINEER

COMMONWEALTH OF MASSACHUSETTS STANLEY R. DILLIS 33182 PROFESSIONAL LAND SURVEYOR — 1/12/17

PROFESSIONAL LAND SURVEYOR

I CERTIFY THIS PLAN CONFORMS TO THE RULES AND REGULATIONS OF THE REGISTERS OF DEEDS OF THE COMMONWEALTH OF MASSACHUSETTS

RESERVED FOR REGISTRY USE

APPROVAL REQUIRED UNDER THE SUBDIVISION CONTROL LAW
DATE APPROVED: _____

_____)
_____)
_____)
_____) BEING A MAJORITY OF THE STOW PLANNING BOARD
_____)
_____)
_____)

DATE ENDORSED: _____

APPROVED SUBJECT TO CONDITIONS SET FORTH IN A COVENANT EXECUTED BY _____
DATED _____ AND TO BE RECORDED HEREWITH

NO BUILDING OR STRUCTURE SHALL BE BUILT OR PLACED ON ANY LOT WITHOUT A PERMIT FROM THE BOARD OF HEALTH

I, _____, CLERK OF THE TOWN OF HEREBY CERTIFY THAT THE NOTICE OF THE APPROVAL OF THIS PLAN BY THE PLANNING BOARD HAS BEEN RECEIVED AND RECORDED BY THIS OFFICE AND NO APPEAL WAS RECEIVED DURING THE TWENTY (20) DAYS NEXT AFTER RECEIPT AND RECORDING OF SAID NOTICE.

STOW TOWN CLERK _____ DATE _____

ZONING CLASSIFICATION: **RESIDENTIAL (RES)**

HAMMERHEAD LOTS:

FRONTAGE	= 50'	SETBACKS: FRONT	= 50'
LOT AREA	= 180,000 SQ. FT.	SIDE	= 45'
OPEN SPACE (MIN.)	= 10%	REAR	= 40'
FLOOR AREA RATIO	= NR	LOT SHAPE (MIN.)	= 0.25

CONVENTIONAL LOTS:

FRONTAGE	= 200'	SETBACKS: FRONT	= 30'
LOT AREA	= 65,340 SQ. FT.	SIDE	= 25'
OPEN SPACE (MIN.)	= 10%	REAR	= 40'
FLOOR AREA RATIO	= NR	LOT SHAPE (MIN.)	= 0.40

OWNER: **RICHARD F. RIEL**
113 WALCOTT STREET
STOW, MA 01775

APPLICANT: **ROBERT VISCO**
30 OLD STOW ROAD
HUDSON, MA 01749

BOOK/PAGE:
BOOK 13501, PAGE 418

MAP/PARCEL:
MAP R-1, PARCEL 31

JILLIAN'S LANE
DEFINITIVE SUBDIVISION DEVELOPMENT
STOW, MASSACHUSETTS
TITLE SHEET

NO.	DATE	DESCRIPTION	BY
2	7/7/16	REVISED PER PLANNING BOARD COMMENTS	PJW
3	8/24/16	REVISED PER PLANNING BOARD DECISION	PJW
4	9/27/16	REVISED DRIVEWAY LOCATION	PJW
5	12/6/16	REVISED PER PLANNING BOARD COMMENTS	PJW
6	1/12/17	REVISED PER PLANNING BOARD DECISION	PJW

PREPARED BY:

DUCHARME & DILLIS
Civil Design Group, Inc.
CIVIL ENGINEERS• LAND SURVEYORS• WETLAND CONSULTANTS
1092 MAIN STREET, P.O. BOX 428
BOLTON, MASSACHUSETTS 01740
PHONE: (978) 779-6091 FAX: (978) 779-0260
www.DucharmeandDillis.com

DESIGN BY:	DRAWN BY:	CHECKED BY:	SHEET NO.
GSR	GSR	GSR	1
DATE: 3/18/16	JOB NUMBER: 5139	DRAWING NO. 5139-TITLE	OF 11

SOIL TEST DATA

SOIL TEST PERFORMED BY GREEN HILL ENGINEERING AND WITNESSED BY BILL BROOKINGS, R.S. NASHOBA ASSOCIATED BOARDS OF HEALTH

TEST HOLE NO. 915-5 DEPTH OF GROUNDWATER: >78"
DATE OF TEST: 09/11/2015 DEPTH OF ESHGW: 28"
SURFACE ELEV.: 282.5 ELEVATION OF ESHGW: 280.2

DEPTH: (IN.)	SOIL HOR.	MATRIX COLOR:	REDOX FEATURES: DEPTH/COLOR/%	SOIL TEXTURE:
0-6"	A	10YR 3/2	-	SL
6-30"	B	10YR 6/6	28" 10YR 6/8	SL
30-78"	C	5Y 6/4	-	SL

TEST HOLE NO. 915-6 DEPTH OF GROUNDWATER: >96"
DATE OF TEST: 09/11/2015 DEPTH OF ESHGW: 28"
SURFACE ELEV.: 292.5 ELEVATION OF ESHGW: 290.2

DEPTH: (IN.)	SOIL HOR.	MATRIX COLOR:	REDOX FEATURES: DEPTH/COLOR/%	SOIL TEXTURE:
0-6"	A	10YR 3/2	-	SL
6-30"	B	10YR 6/6	28" 10YR 6/8	SL
30"-96"	C	5Y 6/4	-	SL

TEST HOLE NO. 915-7 DEPTH OF GROUNDWATER: >108"
DATE OF TEST: 09/11/2015 DEPTH OF ESHGW: 28"
SURFACE ELEV.: 296.5 ELEVATION OF ESHGW: 294.2

DEPTH: (IN.)	SOIL HOR.	MATRIX COLOR:	REDOX FEATURES: DEPTH/COLOR/%	SOIL TEXTURE:
0-6"	A	10YR 3/2	-	SL
6-30"	B	10YR 6/6	28" 10YR 6/8	SL
30"-108"	C	5Y 6/4	-	SL

TEST HOLE NO. 915-8 DEPTH OF GROUNDWATER: >108"
DATE OF TEST: 09/11/2015 DEPTH OF ESHGW: 28"
SURFACE ELEV.: 300.0 ELEVATION OF ESHGW: 297.7

DEPTH: (IN.)	SOIL HOR.	MATRIX COLOR:	REDOX FEATURES: DEPTH/COLOR/%	SOIL TEXTURE:
0-8"	A	10YR 3/2	-	SL
8-30"	B	10YR 6/6	28" 10YR 6/8	SL
30"-108"	C	5Y 6/4	-	SL

TEST HOLE NO. 915-9 DEPTH OF GROUNDWATER: >96"
DATE OF TEST: 09/11/2015 DEPTH OF ESHGW: 28"
SURFACE ELEV.: 293.0 ELEVATION OF ESHGW: 290.7

DEPTH: (IN.)	SOIL HOR.	MATRIX COLOR:	REDOX FEATURES: DEPTH/COLOR/%	SOIL TEXTURE:
0-8"	A	10YR 3/2	-	SL
8-30"	B	10YR 6/6	28" 10YR 6/8	SL
30"-96"	C	5Y 6/4	-	SL

SOIL TEST PERFORMED BY DUCHARME & DILLIS CIVIL DESIGN GROUP, INC.

TEST HOLE NO. 516-1 DEPTH OF GROUNDWATER: 29"
DATE OF TEST: 05/09/2016 DEPTH OF ESHGW: 25"
SURFACE ELEV.: 249.5 ELEVATION OF ESHGW: 247.4

DEPTH: (IN.)	SOIL HOR.	MATRIX COLOR:	REDOX FEATURES: DEPTH/COLOR/%	SOIL TEXTURE:
0-12"	A	10YR 3/2	-	SL
12-29"	B	10YR 6/6	25" 10YR 6/8	SL
29"-33"	C	5Y 6/4	-	SL

TEST HOLE NO. 516-2 DEPTH OF GROUNDWATER: >36"
DATE OF TEST: 05/10/2016 DEPTH OF ESHGW: 28"
SURFACE ELEV.: 296.5 ELEVATION OF ESHGW: 294.16

DEPTH: (IN.)	SOIL HOR.	MATRIX COLOR:	REDOX FEATURES: DEPTH/COLOR/%	SOIL TEXTURE:
0-10"	A	10YR 3/2	-	SL
10-32"	B	10YR 6/6	28" 10YR 6/8	SL
32"-36"	C	5Y 6/4	-	SL

TEST HOLE NO. 816-1 DEPTH OF GROUNDWATER: >96"
DATE OF TEST: 08/23/2016 DEPTH OF ESHGW: 32"
SURFACE ELEV.: 277.0 ELEVATION OF ESHGW: 274.33

DEPTH: (IN.)	SOIL HOR.	MATRIX COLOR:	REDOX FEATURES: DEPTH/COLOR/%	SOIL TEXTURE:
0-12"	A	10YR 3/3	-	SL
12-18"	B	10YR 5/6	-	SL
18"-96"	C	10YR 5/4	-	SL

TEST HOLE NO. 816-2 DEPTH OF GROUNDWATER: >98"
DATE OF TEST: 08/23/2016 DEPTH OF ESHGW: 30"
SURFACE ELEV.: 278.0 ELEVATION OF ESHGW: 275.50

DEPTH: (IN.)	SOIL HOR.	MATRIX COLOR:	REDOX FEATURES: DEPTH/COLOR/%	SOIL TEXTURE:
0-12"	A	10YR 3/3	-	SL
12-18"	B	10YR 5/6	-	SL
18"-98"	C	10YR 5/4	-	SL

TEST HOLE NO. 816-3 DEPTH OF GROUNDWATER: >96"
DATE OF TEST: 08/23/2016 DEPTH OF ESHGW: 28"
SURFACE ELEV.: 287 ELEVATION OF ESHGW: 284.67

DEPTH: (IN.)	SOIL HOR.	MATRIX COLOR:	REDOX FEATURES: DEPTH/COLOR/%	SOIL TEXTURE:
0-12"	A	10YR 3/3	-	SL
12-24"	B	10YR 5/6	-	SL
24"-96"	C	10YR 5/4	-	SL

TEST HOLE NO. 816-4 DEPTH OF GROUNDWATER: >102"
DATE OF TEST: 08/23/2016 DEPTH OF ESHGW: 28"
SURFACE ELEV.: 289 ELEVATION OF ESHGW: 286.67

DEPTH: (IN.)	SOIL HOR.	MATRIX COLOR:	REDOX FEATURES: DEPTH/COLOR/%	SOIL TEXTURE:
0-10"	A	10YR 3/3	-	SL
10-20"	B	10YR 5/6	-	SL
20"-102"	C	10YR 5/4	-	SL

TEST HOLE NO. 816-5 DEPTH OF GROUNDWATER: >84"
DATE OF TEST: 08/23/2016 DEPTH OF ESHGW: 26"
SURFACE ELEV.: 289 ELEVATION OF ESHGW: 286.83

DEPTH: (IN.)	SOIL HOR.	MATRIX COLOR:	REDOX FEATURES: DEPTH/COLOR/%	SOIL TEXTURE:
0-10"	A	10YR 3/3	-	SL
10-18"	B	10YR 5/6	-	SL
18"-84"	C	10YR 5/4	-	SL

TEST HOLE NO. 816-6 DEPTH OF GROUNDWATER: >84"
DATE OF TEST: 08/23/2016 DEPTH OF ESHGW: 27"
SURFACE ELEV.: 289 ELEVATION OF ESHGW: 286.75

DEPTH: (IN.)	SOIL HOR.	MATRIX COLOR:	REDOX FEATURES: DEPTH/COLOR/%	SOIL TEXTURE:
0-12"	A	10YR 3/3	-	SL
12-24"	B	10YR 5/6	-	SL
24"-84"	C	10YR 5/4	-	SL

LEGEND

EXIST. FEATURE	DESCRIPTION	EXIST. SYM.	DESCRIPTION
	STREAMS/RIVERS		EXISTING UTILITY POLE
	LIMIT OF RIVERFRONT AREA		EXISTING GUY WIRE
	LAKES/PONDS/SURFACE WATER		EX. STORM WATER MANHOLE
	WETLANDS		EXISTING WELL
	LIMIT OF BUFFER ZONE	WF A1	EXISTING WETLAND FLAG
100' WELL OFFSET	WELL RADIUS		EXISTING CATCH BASIN
	PROPERTY LINE	E	EXISTING ELECTRICAL METER
	EASEMENT LINE	S	EXISTING SIGN
	SLOPES >15%	PT A	PERC TEST
	HAYBALES	TP 1105-1	TEST PIT
	GUARD RAIL	IP(f)	EXISTING IRON PIPE
	STONE WALL	DH(f)	EXISTING DRILL HOLE
E	EXISTING ELECTRICAL LINE	IR(f)	EXISTING IRON ROD
S	EXISTING SANITARY SEWER	SB(f)	EXISTING STONE BOUND
D	EXISTING STORM DRAIN		DECIDUOUS TREE
T	EXISTING TELEPHONE LINE		CONIFER TREE
OW	EXISTING OVER-HEAD WIRES		SHRUB
	EXISTING UNPAVED ROAD		EXISTING CLEANOUT
180	EXISTING CONTOUR (INDEX)		
179	EX. CONTOUR (INTERMEDIATE)		
175x5	EXISTING SPOT ELEVATION		
	EXISTING BUILDING/HOUSE		
TREE LINE	TREE LINE		

PROP. FEATURE	DESCRIPTION	PROP. SYM.	DESCRIPTION
	REPLICATED WETLANDS		PROPOSED UTILITY POLE
	PROPERTY LINE	SMH-1	PROPOSED SANITARY MANHOLE
	EASEMENT LINE	DMH-1	PROPOSED STORM WATER MANHOLE
	STRAW BALES	CB-1	PROPOSED CATCH BASIN
RET. WALL (BLOCK)	CONC. BLOCK RETAINING WALL	DCB-1	PROPOSED DOUBLE CATCH BASIN
W	PROPOSED WATER LINE	T	PROPOSED ELECTRICAL TRANSFORMER
S	PROPOSED SANITARY SEWER	S	PROPOSED SIGN
D	PROPOSED STORM DRAIN	FES-1	PROPOSED FLARED END SECTION
RD	PROPOSED ROOF DRAIN		PROPOSED RIPRAP
UD	PROPOSED UNDER DRAIN		PROPOSED STONE BOUND PER SUBDIVISION REGS
ETC	PRO. U/G ELEC, CABLE & TEL.		PROPOSED IRON ROD PER SUBDIVISION REGS
BCCB	PROP. BACK CAPE COD BERM		DECIDUOUS TREE
EOP	PROPOSED EDGE OF PAVEMENT		
	PROPOSED UNPAVED ROAD		
180	PROPOSED CONTOUR (INDEX)		
179	PROP. CONTOUR (INTERMEDIATE)		
175x5	PROPOSED SPOT ELEVATION		
	PROPOSED BUILDING/HOUSE		
TREE LINE	TREE LINE		
	PROP CONSERVATION BOUND 6"X6"X36" CONC.BOUND SEE NHESP GUIDANCE FOR SPECS		

GENERAL NOTES/REFERENCES:

1. TOPOGRAPHICAL INFORMATION IS A RESULT ON AN ON-THE-GROUND SURVEY BY DUCHARME & DILLIS CIVIL DESIGN GROUP, INC. ELEVATIONS REFER TO NAVD 88 DATUM.
2. PROPERTY LINE INFORMATION WAS PREPARED BY DUCHARME & DILLIS CIVIL DESIGN GROUP, INC. BASED ON AN ON-THE-GROUND SURVEY AND PLANS AND DEEDS OF RECORD.
3. ALL SOIL TESTING LOCATIONS ARE BASED ON TESTS PERFORMED BY GREEN HILL ENGINEERING IN 2015 AND DUCHARME & DILLIS CIVIL DESIGN GROUP, INC. IN 2016.
4. EXISTING UTILITIES SHOWN ON THIS PLAN WERE COMPILED FROM FIELD MEASUREMENT AND AERIAL PHOTOS. THE UTILITIES SHOWN ON THIS PLAN ARE FOR REFERENCE ONLY AND SHOULD NOT BE ASSUMED TO BE CORRECT NOR SHOULD IT BE ASSUMED THAT THE UTILITIES SHOWN ARE THE ONLY UTILITIES LOCATED ON OR NEAR THE SITE. THE CONTRACTOR SHALL CALL DIG SAFE 1-888-DIG-SAFE PRIOR TO CONSTRUCTION IN ACCORDANCE WITH STATE LAWS.
5. PRIOR TO ANY SITE WORK FOR THE DWELLING UNITS, JILLIAN'S LANE OR COMMON DRIVEWAY, THE EXTENDED BASIN AND CULVERT UPGRADE SHALL TAKE PLACE.

GRADING NOTES/SPECIFICATIONS:

A. SITE PREPARATION:

1. A STORMWATER POLLUTION PREVENTION PLAN IS REQUIRED FOR THE SITE. THE CONTRACTOR IS RESPONSIBLE TO UPDATING THE STORMWATER POLLUTION PREVENTION PLAN FOR THE APPLICABLE CONTACTS, AND FOR MAKING REGULAR INSPECTIONS DURING CONSTRUCTION. PRIOR TO CONSTRUCTION THE CONTRACTOR SHALL FILE THE REQUIRE EPA NOTICE OF INTENT FOR COVERAGE UNDER THE NPDES PROGRAM. CONTRACTOR TO PLACE EROSION CONTROL BARRIER AS SPECIFIED ON THESE PLANS AND IN ACCORDANCE WITH ALL APPROVALS FROM THE TOWN OF STOW AND IN ACCORDANCE WITH THE STORMWATER POLLUTION PREVENTION PLAN.
2. CONSTRUCTION VEHICLES ARE PROHIBITED FROM USING MITCHELL ROAD.
3. CONTRACTOR SHALL STAKE ALL LIMITS OF CLEARING PRIOR TO CONSTRUCTION.
4. GRADES SHOWN ON THIS PLAN REFER TO FINAL FINISHED GRADES.
5. PORTIONS OF THE INFILTRATION POND SLOPES SHALL BE GRADED AT A 2:1 SLOPE WITH EROSION CONTROL MATS AS SHOWN ON THE EROSION CONTROL PLAN.
6. ALL SLOPES GRADED AT 3:1 OR GREATER SHALL HAVE EROSION CONTROL MATS AS SHOWN ON THE EROSION CONTROL PLAN.
7. ALL SLOPES, UNLESS OTHERWISE NOTED SHALL BE GRADED AT 3:1.
8. TEMPORARY SEEDING, MULCHING OR OTHER SUITABLE STABILIZATION METHOD MAY BE USED TO PROTECT EXPOSED SOIL DURING CONSTRUCTION.
9. ALL SLOPES SHALL BE COVERED WITH TOPSOIL TO A DEPTH OF AT LEAST 6 INCHES AND PLANTED WITH VEGETATIVE COVER SUFFICIENT TO PREVENT EROSION.
10. PERMANENT SEEDING SHOULD BE UNDERTAKEN DURING THE SPRING, SUMMER AND EARLY FALL. PERMANENT VEGETATION SHALL BE INSTALLED AS SOON AS POSSIBLE AFTER CONSTRUCTION IS COMPLETE, AND NO LATER THAN THE FIRST FULL SPRING THEREAFTER.
11. NO STRIPPED AREA OR AREAS SHALL REMAIN THROUGH WINTER WITHOUT TEMPORARY COVER OF WINTER RYE OR SIMILAR PLANT MATERIAL BEING PROVIDED FOR SOIL CONTROL.
12. REMOVE TREES WITHIN THE LIMIT OF CLEARING AS REQUIRED FOR CONSTRUCTION. TREES WITHIN THE LIMIT OF CLEARING AND OUTSIDE OF THE INFLUENCE OF ROADWAYS, HOUSES, DRIVEWAYS, SEPTIC SYSTEMS, UTILITIES AND ASSOCIATED GRADING SHALL BE SAVED IF POSSIBLE.
13. STUMPS SHALL BE REMOVED AND DISPOSED OF IN ACCORDANCE WITH THE TOWN OF STOW SPECIFICATIONS.
14. THE INFILTRATION POND SHALL BE CONSTRUCTED AT THE BEGINNING OF THE SITE WORK TO TREAT THE RUN OFF GENERATED AND MAINTAINED THROUGHOUT THE CONSTRUCTION OF THE PROJECT.

B. DRIVEWAYS:

1. THE COMMON DRIVEWAY SHALL NOT SERVE, AT ANY TIME, MORE THAN THE TWO LOTS FOR USES ALLOWED IN THE STOW ZONING BYLAW.
2. DRIVEWAYS TO BE CONSTRUCTED IN ACCORDANCE WITH THE TOWN OF STOW DRIVEWAY REGULATIONS AND SHARED DRIVEWAY REGULATIONS.
3. NO PAVING SHALL TAKE PLACE FROM NOVEMBER 15 TO MARCH 15 OF ANY YEAR WITHOUT PRIOR PLANNING BOARD APPROVAL.
4. DRIVEWAYS SHALL BE 12' IN WIDTH WITH 4 FOOT SHOULDERS. (SEE TYPICAL CROSS SECTION)
5. THE TRAVELED WAY SHALL CONTAIN A GRAVEL SUBBASE SPREAD IN TWO LAYERS PER MASSACHUSETTS STANDARD SPECIFICATION FOR HIGHWAYS AND BRIDGES (SSH&B) SECTION 401.60. THE BOTTOM 12 INCHES SHALL CONFORM TO SSH&B M.1.03.0 TYPE A. THE TOP 4 INCHES SHALL CONFORM TO SSH&B M.2.01.7. THE TRAVEL WAY SHALL BE SUPERELVEATED AT A 1/4 INCH PER FOOT WITH A BINDER COARSE OF 2 INCHES COMPACTED MEASURE. A TOP COARSE SHALL BE COMPACTED TO 1-1/2 INCHES. COMPACTION SHALL BE PERFORMED WITH A VIBRATORY ROLLER.
6. DRIVEWAYS TO HAVE A MINIMUM SLOPE OF 0.75% AND A MAXIMUM SLOPE OF 10%.
7. DRIVEWAY EMBANKMENTS TO BE NO STEEPER THAN 2:1. SWALE ALONG DRIVEWAY AND COMMON DRIVEWAY SHALL BE NO STEEPER THAN 1.5:1.
8. DRIVEWAYS TO BE CONSTRUCTED IN THE LOCATIONS SHOWN. MODIFICATIONS TO DRIVEWAYS SHALL BE APPROVED BY THE ENGINEER PRIOR TO CONSTRUCTION.
   SHOULDERS SHALL BE CONSTRUCTED OF RECYCLED ASPHALT PAVEMENT (RAP) AND SHALL CONFORM TO SPECIFICATIONS AS STATED IN SECTION M1.11.0 OF MASS HIGHWAY STANDARD SPECIFICATIONS FOR HIGHWAYS AND BRIDGES.

C. DRAINAGE:

1. STORMWATER MANAGEMENT AREAS TO BE CONSTRUCTED IN THE LOCATION SHOWN ON THE PLANS.
2. PROVIDE UNDERGROUND ROOFTOP INFILTRATION SYSTEM AS SHOWN. REFER TO THE DETAIL SHEET FOR CONSTRUCTION DETAILS.
3. STONE RIPRAP SHALL BE 4" TO 12" ANGULAR RIPRAP PLACED OVER FILTER FABRIC.
4. ALL SWALES AND CHECK DAMS TO BE RESTORED WITH 4" TO 12" RIPRAP, 1' IN DEPTH.

UTILITY NOTES/SPECIFICATIONS:

A. DRAINAGE STRUCTURES:

1. CATCH BASIN FRAME & GRATE TO BE AS MANUFACTURED AS SHOWN ON PLANS.
2. CONTRACTOR TO SET DRAIN MANHOLE COVERS TO FINAL FINISHED GRADE AS SHOWN ON THE GRADING PLAN.
3. UNDERGROUND INFILTRATION CHAMBERS SHALL BE ADS STORMTECH RC-310 PRODUCT, OR APPROVED EQUAL. SEE DETAILS SHEETS. PROVIDE CUT SHEETS TO ENGINEER FOR APPROVAL.
4. MANHOLE GRATES SHALL BE MAINTAINED DURING AND AFTER CONSTRUCTION TO ENSURE UNOBSTRUCTED DRAINAGE. SEE THE OPERATION AND MAINTENANCE MANUAL FOR TYPICAL CLEANING ACTIVITIES AND SCHEDULE.

B. ELECTRICAL/TELEPHONE/CABLE:

1. UTILITY CONNECTIONS TO THE PROPOSED LOTS SHALL BE UNDERGROUND SERVICE CONNECTIONS IN COMPLIANCE WITH THE APPLICABLE UTILITY COMPANIES SPECIFICATIONS.
2. CONTRACTOR TO COORDINATE WITH APPROPRIATE UTILITY COMPANIES FOR THE CONSTRUCTION OF THE CONDUIT FOR UNDERGROUND UTILITIES.
3. CONTRACTOR TO FACILITATE THE RELOCATION OF THE EXISTING UTILITY POLE(S) AS SHOWN ON THE PLAN FOR CONNECTION OF UNDERGROUND UTILITIES FOR THE PROJECT AS IS DETERMINED TO BE REQUIRED BY THE UTILITY COMPANY.
4. CONTRACTOR SHALL COMPLY WITH ALL LOCAL, STATE AND FEDERAL REGULATIONS AND REQUIREMENTS FOR THE INSTALLATION OF UTILITIES.
5. CONTRACTOR TO COMPLY WITH ALL SPECIFICATIONS AND REQUIREMENTS OF THE INDIVIDUAL UTILITY COMPANY.
6. NO EXTERIOR LIGHT FIXTURES SHALL SHINE ON ADJACENT PROPERTIES OR TOWARDS ANY STREET IN SUCH A MANNER AS TO CREATE A NUISANCE OR HAZARD. ALL EXTERIOR LIGHTING SHALL COMPLY WITH SECTION 3.8.1.5 OF THE STOW BYLAWS. ALL FIXTURES WITH A RATE OUTPUT OF 2,000 LUMENS OR MORE MUST BE FULL-CUTOFF FIXTURES.

C. PIPE:

1. ALL DRAINAGE PIPE TO BE HDPE AS MANUFACTURED BY ADVANCED DRAINAGE SYSTEM, INC., OR APPROVED EQUAL.
2. ALL CONDUIT FOR UTILITIES TO BE AS SPECIFIED BY THE APPROPRIATE UTILITY COMPANY.
3. BACKFILL SHALL BE AS SHOWN ON THE PIPE IN TRENCH DETAIL ON SHEET 8 OF 9.

COPYRIGHT DUCHARME & DILLIS CIVIL DESIGN GROUP, INC 2017

RESERVED FOR REGISTRY USE

COMMONWEALTH OF MASSACHUSETTS GREGORY S. ROY CIVIL NO. 46070 REGISTERED PROFESSIONAL ENGINEER
1/12/17
PROFESSIONAL ENGINEER

COMMONWEALTH OF MASSACHUSETTS STANLEY R. DILLIS 33182 PROFESSIONAL LAND SURVEYOR
1/12/17
PROFESSIONAL LAND SURVEYOR

I CERTIFY THIS PLAN CONFORMS TO THE RULES AND REGULATIONS OF THE REGISTERS OF DEEDS OF THE COMMONWEALTH OF MASSACHUSETTS

APPROVAL REQUIRED UNDER THE SUBDIVISION CONTROL LAW
DATE APPROVED: ____________________

____________________)
____________________)
____________________)
____________________) BEING A MAJORITY OF THE STOW PLANNING BOARD
____________________)
____________________)
____________________)

DATE ENDORSED: ____________________

APPROVED SUBJECT TO CONDITIONS SET FORTH IN A COVENANT EXECUTED BY ____________________
DATED ____________________ AND TO BE RECORDED HEREWITH

NO BUILDING OR STRUCTURE SHALL BE BUILT OR PLACED ON ANY LOT WITHOUT A PERMIT FROM THE BOARD OF HEALTH

I, ____________________, CLERK OF THE TOWN OF
HEREBY CERTIFY THAT THE NOTICE OF THE APPROVAL OF THIS PLAN BY THE PLANNING BOARD HAS BEEN RECEIVED AND RECORDED BY THIS OFFICE AND NO APPEAL WAS RECEIVED DURING THE TWENTY (20) DAYS NEXT AFTER RECEIPT AND RECORDING OF SAID NOTICE.

STOW TOWN CLERK DATE

ZONING CLASSIFICATION: **RESIDENTIAL (RES)**

HAMMERHEAD LOTS:
FRONTAGE = 50'
LOT AREA = 180,000 SQ. FT.
OPEN SPACE (MIN.) = 10%
FLOOR AREA RATIO = NR
SETBACKS: FRONT = 50'
SIDE = 45'
REAR = 40'
LOT SHAPE (MIN.) = 0.25

CONVENTIONAL LOTS:
FRONTAGE = 200'
LOT AREA = 65,340 SQ. FT.
OPEN SPACE (MIN.) =10%
FLOOR AREA RATIO = NR
SETBACKS: FRONT = 30'
SIDE = 25'
REAR =40'
LOT SHAPE (MIN.) = 0.40

OWNER: **RICHARD F. RIEL**
113 WALCOTT STREET
STOW, MA 01775

APPLICANT: **ROBERT VISCO**
30 OLD STOW ROAD
HUDSON, MA 01749

BOOK/PAGE:
BOOK 13501, PAGE 418

MAP/PARCEL:
MAP R-1, PARCEL 31

JILLIAN'S LANE
DEFINIIVE SUBDIVISION DEVELOPMENT
STOW, MASSACHUSETTS
LEGEND, NOTES AND SPECIFICATIONS

NO.	DATE	DESCRIPTION	BY
2	7/7/16	REVISED PER PLANNING BOARD COMMENTS	PJW
3	8/24/16	REVISED PER PLANNING BOARD DECISION	PJW
4	9/27/16	REVISED DRIVEWAY LOCATION	PJW
5	12/6/16	REVISED PER PLANNING BOARD COMMENTS	PJW
6	1/12/17	REVISED PER PLANNING BOARD DECISION	PJW

PREPARED BY:
DUCHARME & DILLIS
Civil Design Group, Inc.
CIVIL ENGINEERS• LAND SURVEYORS• WETLAND CONSULTANTS
1092 MAIN STREET, P.O. BOX 428
BOLTON, MASSACHUSETTS 01740
PHONE: (978) 779-6091 FAX: (978) 779-0260
www.DucharmeandDillis.com

DESIGN BY:	DRAWN BY:	CHECKED BY:	SHEET NO.
GSR	GSR	GSR	2
DATE: 3/18/16	JOB NUMBER: 5139	DRAWING NO. 5139-EXIST	OF 11

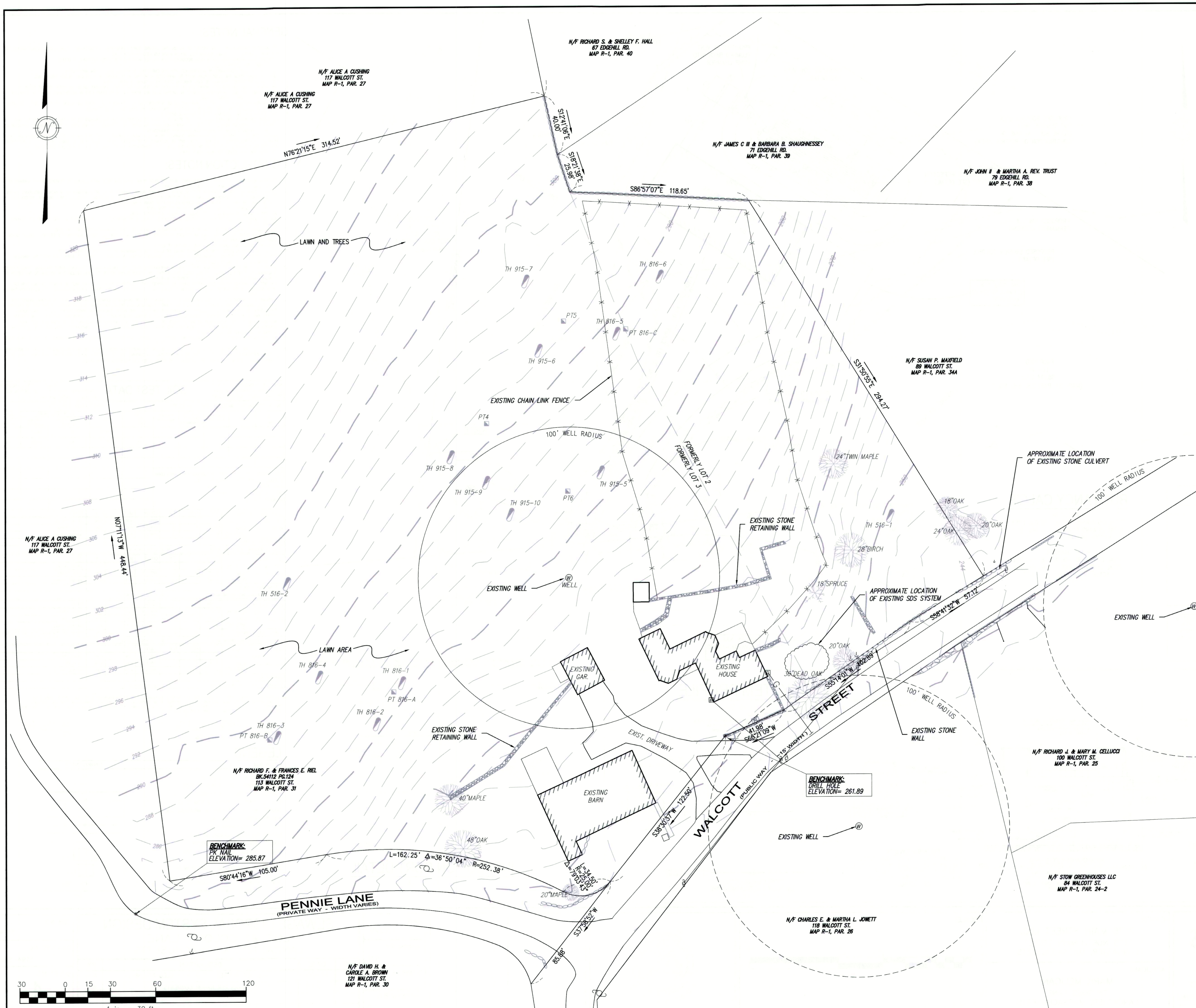

COPYRIGHT DUCHARME & DILLIS CIVIL DESIGN GROUP, INC 2017

PROFESSIONAL ENGINEER 1/12/17

PROFESSIONAL LAND SURVEYOR 1/12/17

I CERTIFY THIS PLAN CONFORMS TO THE RULES AND REGULATIONS OF THE REGISTERS OF DEEDS OF THE COMMONWEALTH OF MASSACHUSETTS

RESERVED FOR REGISTRY USE

APPROVAL REQUIRED UNDER THE SUBDIVISION CONTROL LAW
DATE APPROVED: ____________

____________)
____________)
____________)
____________) BEING A MAJORITY OF THE STOW PLANNING BOARD
____________)
____________)
____________)

DATE ENDORSED: ____________

APPROVED SUBJECT TO CONDITIONS SET FORTH IN A COVENANT EXECUTED BY ____________ DATED ____________ AND TO BE RECORDED HEREWITH

NO BUILDING OR STRUCTURE SHALL BE BUILT OR PLACED ON ANY LOT WITHOUT A PERMIT FROM THE BOARD OF HEALTH

I, ____________, CLERK OF THE TOWN OF STOW HEREBY CERTIFY THAT THE NOTICE OF THE APPROVAL OF THIS PLAN BY THE PLANNING BOARD HAS BEEN RECEIVED AND RECORDED BY THIS OFFICE AND NO APPEAL WAS RECEIVED DURING THE TWENTY (20) DAYS NEXT AFTER RECEIPT AND RECORDING OF SAID NOTICE.

STOW TOWN CLERK DATE

ZONING CLASSIFICATION: RESIDENTIAL (RES)

HAMMERHEAD LOTS:

FRONTAGE	= 50'	SETBACKS: FRONT	= 50'
LOT AREA	= 180,000 SQ. FT.	SIDE	= 45'
OPEN SPACE (MIN.)	= 10%	REAR	= 40'
FLOOR AREA RATIO	= NR	LOT SHAPE (MIN.)	= 0.25

CONVENTIONAL LOTS:

FRONTAGE	= 200'	SETBACKS: FRONT	= 30'
LOT AREA	= 65,340 SQ. FT.	SIDE	= 25'
OPEN SPACE (MIN.)	= 10%	REAR	= 40'
FLOOR AREA RATIO	= NR	LOT SHAPE (MIN.)	= 0.40

OWNER: RICHARD F. RIEL
113 WALCOTT STREET
STOW, MA 01775

APPLICANT: ROBERT VISCO
30 OLD STOW ROAD
HUDSON, MA 01749

BOOK/PAGE: BOOK 13501, PAGE 418

MAP/PARCEL: MAP R-1, PARCEL 31

JILLIAN'S LANE
DEFINIIVE SUBDIVISION DEVELOPMENT
STOW, MASSACHUSETTS
EXISTING CONDITIONS

NO.	DATE	DESCRIPTION	BY
2	7/7/16	REVISED PER PLANNING BOARD COMMENTS	PJW
3	8/24/16	REVISED PER PLANNING BOARD DECISION	PJW
4	9/27/16	REVISED DRIVEWAY LOCATION	PJW
5	12/6/16	REVISED PER PLANNING BOARD COMMENTS	PJW
6	1/12/17	REVISED PER PLANNING BOARD DECISION	PJW

PREPARED BY:
DUCHARME & DILLIS
Civil Design Group, Inc.
CIVIL ENGINEERS• LAND SURVEYORS• WETLAND CONSULTANTS
1092 MAIN STREET, P.O. BOX 428
BOLTON, MASSACHUSETTS 01740
PHONE: (978) 779-6091 FAX: (978) 779-0260
www.DucharmeandDillis.com

DESIGN BY:	DRAWN BY:	CHECKED BY:	SHEET NO.
GSR	GSR	GSR	3
DATE: 3/18/16	JOB NUMBER: 5139	DRAWING NO. 5139-EXIST	OF 11

RESTRICTIVE COVENANTS NOTES:

A RESTRICTIVE COVENANT, IN RECORDABLE FORM, RENEWABLE AT 20-YEAR INCREMENTS, RUNNING TO AND FOR THE BENEFIT OF THE TOWN OF STOW SHALL BE SUBMITTED TO AND APPROVED BY THE PLANNING BOARD, WHICH SHALL INCLUDE THE FOLLOWING:

- A PROVISION THAT THE SUBDIVISION ROAD AS SHOWN ON THE PLAN SHALL SERVE NO GREATER THAN THE TWO LOTS AND THAT SUCH LOTS ARE LIMITED TO USES AS ALLOWED IN THE ZONING BYLAWS
- A PROVISION THAT ANY FURTHER DEVELOPMENT ON OR DIVISION OF THE LAND AS SHOWN ON THE PLAN, OR ACCESS TO ABUTTING PROPERTY SHALL REQUIRE THE SUBMISSION OF A NEW SUBDIVISION PLAN IN ACCORDANCE WITH THE RULES AND BYLAWS IN EFFECT AT THE TIME OF SUBMISSION. SUCH FURTHER DEVELOPMENT OR SUBDIVISION SHALL INCLUDE A REQUIREMENT THAT THE SUBDIVISION ROAD SHALL BE CONSTRUCTED TO STANDARDS IN ACCORDANCE WITH THE RULES IN EFFECT AT THE TIME OF SUCH SUBMISSION.
- A PROVISION THAT THERE SHALL BE NO PARKING IN THE CUL-DE-SAC T-TURNAROUND.
- A PROVISION THAT THE SUBDIVISION ROAD SHALL NOT BE PRESENTED TO TOWN MEETING FOR ACCEPTANCE AS A PUBLIC WAY.
- A PROVISION THAT OWNERSHIP OF THE SUBDIVISION ROAD AND ASSOCIATED INFRASTRUCTURE SHALL BE OWNED AND MAINTAINED BY A HOMEOWNERS ASSOCIATION.
- A COMMON DRIVEWAY EASEMENT IN RECORDABLE FORM OVER JILLIAN'S LANE PROVIDING ACCESS TO "LOT 2 AND 3"
- THE HOMEOWNERS ASSOCIATION SHALL BEAR AND HAVE JOINT AND SEVERAL RESPONSIBILITIES AND OBLIGATIONS FOR THE REPAIR, MAINTENANCE, RECONSTRUCTION OF THE SUBDIVISION ROAD AND ASSOCIATED INFRASTRUCTURE (INCLUDING MAINTENANCE OF ALL DRAINAGE FACILITIES INCLUDING THE DETENTION BASINS IN ACCORDANCE WITH THE OPERATIONS AND MAINTENANCE PLAN, AND SNOW PLOWING OF THE SUBDIVISION ROAD, SO AS TO PROVIDE CONTINUOUS YEAR-ROUND ACCESS FOR VEHICLE TRAFFIC FOR THE CONVENIENCE OF THE OWNERS OF THE LOTS, AND TO PROVIDE CONTINUOUS YEAR-ROUND ACCESS FOR ALL EMERGENCY, FIRE, RESCUE, POLICE, MOVING CONSTRUCTION AND MAINTENANCE VEHICLES IN ACCORDANCE WITH THE MASSACHUSETTS COMPREHENSIVE FIRE SAFETY CODE REGULATIONS AS SPECIFIED IN 527 CMR 1.00 AND SECTION 7.4 OF THE DECISION AND CERTIFICATE OF ACTION.
- NO LAND DISTURBANCE OF ANY KIND SHALL OCCUR WITHIN THE LOCUS AND NO BUILDING PERMIT SHALL BE ISSUED UNTIL A SUBDIVISION ROAD RESTRICTIVE COVENANT, RUNNING WITH THE LAND HAS BEEN APPROVED BY THE PLANNING BOARD AND IN A FORM SATISFACTORY TO ASSURE COMPLIANCE WITH THESE PROVISIONS AND RELATED APPROVALS, AND SAID DOCUMENT HAS BEEN RECORDED AT THE REGISTRY OF DEEDS WITH PROOF OF SAID RECORDING FIRST BEING PROVIDED TO THE BUILDING COMMISSIONER AND PLANNING BOARD.
- ANY FURTHER DEVELOPMENT OR DIVISION OF ANY OF THE LAND SHOWN ON THIS PLAN WHICH WILL RESULT IN THE CREATION OF A TOTAL OF SIX (6) OR MORE DWELLING UNITS, INCLUDING THE TWO DWELLING UNITS APPROVED BY THIS DECISION, ON THE PROPERTY SHOWN ON THIS PLAN, SHALL REQUIRE A SPECIAL PERMIT FORM THE PLANNING BOARD IN ACCORDANCE WITH SECTION 8.9 (INCLUSION OF AFFORDABLE HOUSING) OF THE BYLAW.

EASEMENT NOTES:

THE EASEMENT SHALL PROVIDE CONTINUOUS YEAR-ROUND ACCESS FOR VEHICLE TRAFFIC FOR THE CONVENIENCE OF THE OWNERS OF THE LOTS AND TO PROVIDE CONTINUOUS ACCESS OF THE 20' WIDE COMMON DRIVEWAY FOR ALL EMERGENCY, FIRE, RESCUE, POLICE, MOVING CONSTRUCTION AND MAINTENANCE VEHICLES IN ACCORDANCE WITH THE MASSACHUSETTS COMPREHENSIVE FIRE SAFETY CODE REGULATIONS AS SPECIFIED IN 527 CMR 1.00 AND SECTION 7.4 OF THE DECISION AND CERTIFICATE OF ACTION.

PROPERTY SUMMARY

TOTAL AREA SUBDIVDED 216,051 SF (4.960 ACRES)
TOTAL AREA LOTS 1-3 148,070 SF (3.339 ACRES)
TOTAL RIGHT OF WAY 15,760 SF (0.362 ACRES)
TOTAL DRAINAGE EASEMENT 52,221 SF (1.199 ACRES)

LOT SUMMARY

LOT 1 AREA 65,380 SF (1.501 AC)
EASEMENTS 1,612 SF (0.037 AC)
DEVELOPABLE SITE AREA 63,768 SF (1.464 AC)

LOT 2 AREA 65,375 SF 1.501 AC
EASEMENTS 13,732 SF (0.315 AC)
DEVELOPABLE SITE AREA 51,643 SF (1.186 AC)

LOT 3 AREA 69,535 (1.596) AC
EASEMENTS 36,877 SF (0.847 AC)
DEVELOPABLE SITE AREA 32,658 SF (0.750 AC)

▣ PROPOSED GRANITE BOUND PER SUBDIVISION REGS
■ PROPOSED CONCRETE BOUND PER SUBDIVISION REGS

PLAN REFERENCE:
BK. No.11274 PG 721

PLAN REFERENCE:
PL. No.1313 OF 1994

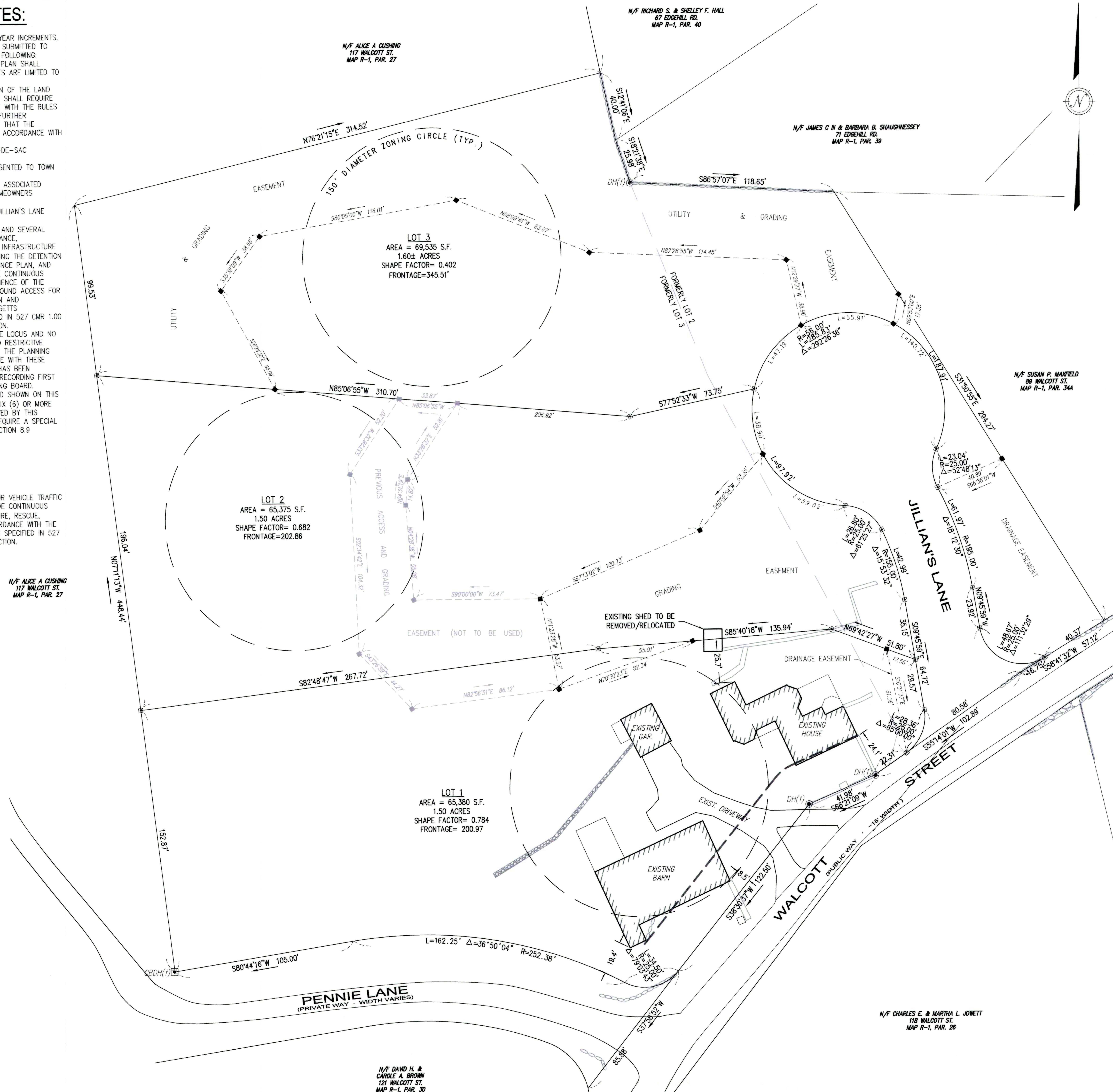

COPYRIGHT DUCHARME & DILLIS CIVIL DESIGN GROUP, INC 2017

RESERVED FOR REGISTRY USE

PROFESSIONAL ENGINEER

PROFESSIONAL LAND SURVEYOR

I CERTIFY THIS PLAN CONFORMS TO THE RULES AND REGULATIONS OF THE REGISTERS OF DEEDS OF THE COMMONWEALTH OF MASSACHUSETTS

APPROVAL REQUIRED UNDER THE SUBDIVISION CONTROL LAW
DATE APPROVED: ______________

BEING A MAJORITY OF THE STOW PLANNING BOARD

DATE ENDORSED: ______________

APPROVED SUBJECT TO CONDITIONS SET FORTH IN A COVENANT EXECUTED BY ______________
DATED ______________ AND TO BE RECORDED HEREWITH

NO BUILDING OR STRUCTURE SHALL BE BUILT OR PLACED ON ANY LOT WITHOUT A PERMIT FROM THE BOARD OF HEALTH

I, ______________, CLERK OF THE TOWN OF STOW HEREBY CERTIFY THAT THE NOTICE OF THE APPROVAL OF THIS PLAN BY THE PLANNING BOARD HAS BEEN RECEIVED AND RECORDED BY THIS OFFICE AND NO APPEAL WAS RECEIVED DURING THE TWENTY (20) DAYS NEXT AFTER RECEIPT AND RECORDING OF SAID NOTICE.

STOW TOWN CLERK — DATE

ZONING CLASSIFICATION: RESIDENTIAL (RES)

HAMMERHEAD LOTS:

FRONTAGE	= 50'	SETBACKS: FRONT	= 50'
LOT AREA	= 180,000 SQ. FT.	SIDE	= 45'
OPEN SPACE (MIN.)	= 10%	REAR	= 40'
FLOOR AREA RATIO	= NR	LOT SHAPE (MIN.)	= 0.25

CONVENTIONAL LOTS:

FRONTAGE	= 200'	SETBACKS: FRONT	= 30'
LOT AREA	= 65,340 SQ. FT.	SIDE	= 25'
OPEN SPACE (MIN.)	= 10%	REAR	= 40'
FLOOR AREA RATIO	= NR	LOT SHAPE (MIN.)	= 0.40

OWNER: RICHARD F. RIEL
113 WALCOTT STREET
STOW, MA 01775

APPLICANT: ROBERT VISCO
30 OLD STOW ROAD
HUDSON, MA 01749

BOOK/PAGE:
BOOK 13501, PAGE 418

MAP/PARCEL:
MAP R-1, PARCEL 31

JILLIAN'S LANE
DEFINITIVE SUBDIVISION DEVELOPMENT
STOW, MASSACHUSETTS
LOT LAYOUT PLAN

NO.	DATE	DESCRIPTION	BY
2	7/7/16	REVISED PER PLANNING BOARD COMMENTS	PJW
3	8/24/16	REVISED PER PLANNING BOARD DECISION	PJW
4	9/27/16	REVISED DRIVEWAY LOCATION	PJW
5	12/6/16	REVISED PER PLANNING BOARD COMMENTS	PJW
6	1/12/17	REVISED PER PLANNING BOARD DECISION	PJW

PREPARED BY:

DUCHARME & DILLIS
Civil Design Group, Inc.
CIVIL ENGINEERS• LAND SURVEYORS• WETLAND CONSULTANTS
1092 MAIN STREET, P.O. BOX 428
BOLTON, MASSACHUSETTS 01740
PHONE: (978) 779-6091 FAX: (978) 779-0260
www.DucharmeandDillis.com

DESIGN BY: GSR	DRAWN BY: GSR	CHECKED BY: GSR	SHEET NO.
DATE: 3/18/16	JOB NUMBER: 5139	DRAWING NO. 5139-LLP	4 OF 11

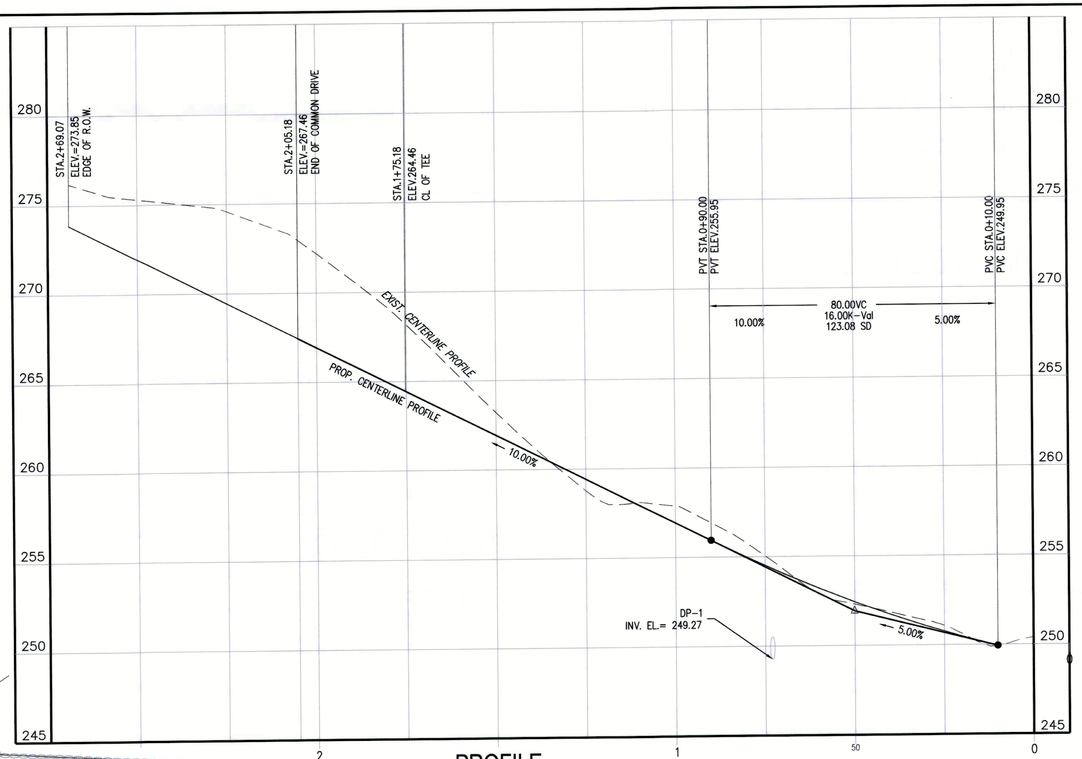

PROFILE

SCALE: 1" = 20' (HOR.)
1" = 4' (VERT.)

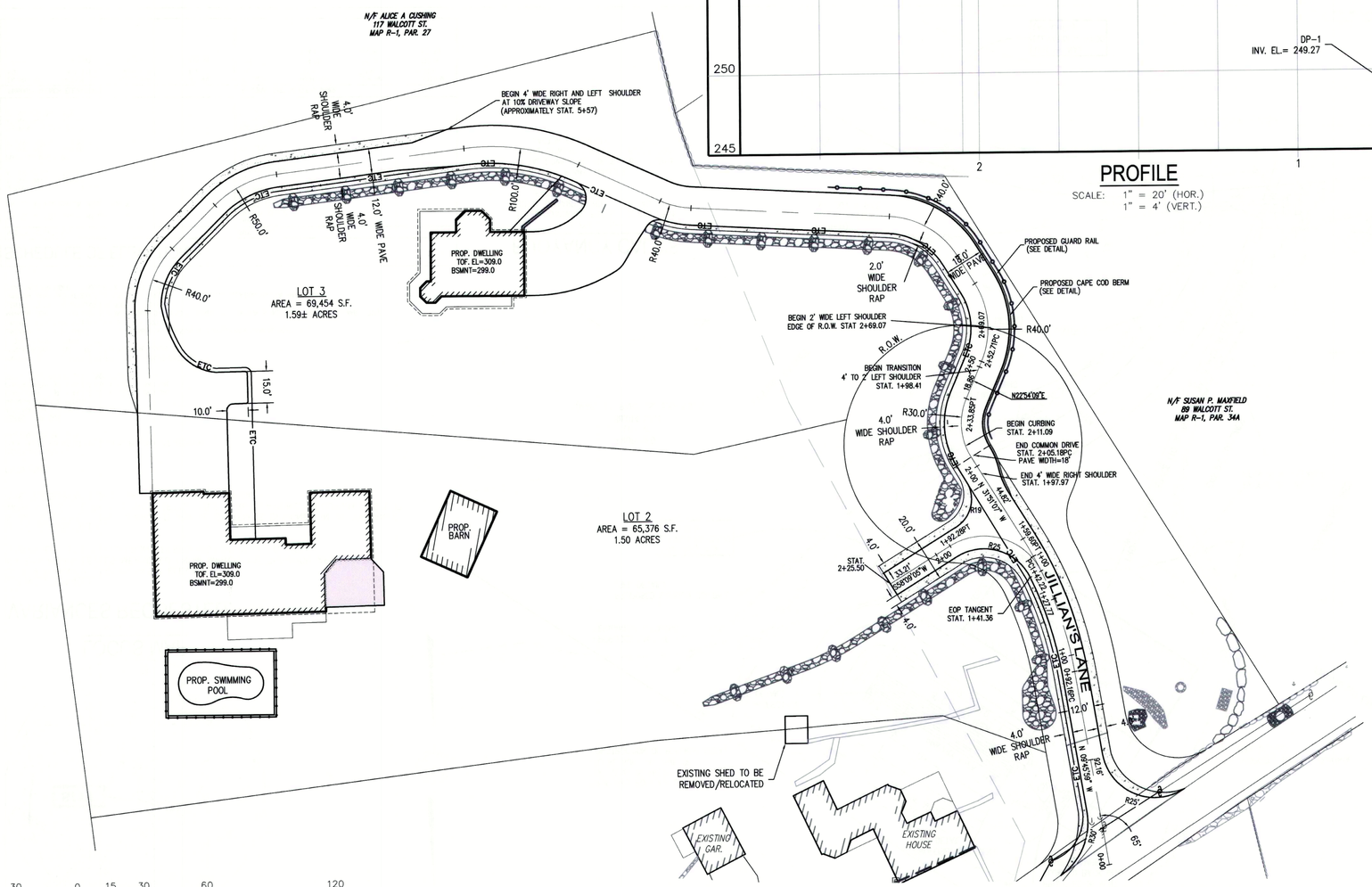

PLAN VIEW

SCALE: 1" = 30'

30 0 15 30 60 120
1 in. = 30 ft.

COPYRIGHT DUCHARME & DILLIS CIVIL DESIGN GROUP, INC 2017

COMMONWEALTH OF MASSACHUSETTS — GREGORY S. ROY — CIVIL — NO. 46070 — REGISTERED PROFESSIONAL ENGINEER
1/12/17
PROFESSIONAL ENGINEER

COMMONWEALTH OF MASSACHUSETTS — STANLEY R. DILLIS — 33162 — PROFESSIONAL LAND SURVEYOR
1/12/17
PROFESSIONAL LAND SURVEYOR

I CERTIFY THIS PLAN CONFORMS TO THE RULES AND REGULATIONS OF THE REGISTERS OF DEEDS OF THE COMMONWEALTH OF MASSACHUSETTS

RESERVED FOR REGISTRY USE

APPROVAL REQUIRED UNDER THE SUBDIVISION CONTROL LAW
DATE APPROVED: _____

_____)
_____)
_____)
_____) BEING A MAJORITY OF THE STOW PLANNING BOARD
_____)
_____)
_____)

DATE ENDORSED: _____

APPROVED SUBJECT TO CONDITIONS SET FORTH IN A COVENANT EXECUTED BY _____ DATED _____ AND TO BE RECORDED HEREWITH

NO BUILDING OR STRUCTURE SHALL BE BUILT OR PLACED ON ANY LOT WITHOUT A PERMIT FROM THE BOARD OF HEALTH

I, _____, CLERK OF THE TOWN OF STOW HEREBY CERTIFY THAT THE NOTICE OF THE APPROVAL OF THIS PLAN BY THE PLANNING BOARD HAS BEEN RECEIVED AND RECORDED BY THIS OFFICE AND NO APPEAL WAS RECEIVED DURING THE TWENTY (20) DAYS NEXT AFTER RECEIPT AND RECORDING OF SAID NOTICE.

STOW TOWN CLERK DATE

ZONING CLASSIFICATION: **RESIDENTIAL (RES)**

HAMMERHEAD LOTS:

FRONTAGE	= 50'	SETBACKS: FRONT	= 50'
LOT AREA	= 180,000 SQ. FT.	SIDE	= 45'
OPEN SPACE (MIN.)	= 10%	REAR	= 40'
FLOOR AREA RATIO	= NR	LOT SHAPE (MIN.)	= 0.25

CONVENTIONAL LOTS:

FRONTAGE	= 200'	SETBACKS: FRONT	= 30'
LOT AREA	= 65,340 SQ. FT.	SIDE	= 25'
OPEN SPACE (MIN.)	= 10%	REAR	= 40'
FLOOR AREA RATIO	= NR	LOT SHAPE (MIN.)	= 0.40

OWNER: RICHARD F. RIEL
113 WALCOTT STREET
STOW, MA 01775

APPLICANT: ROBERT VISCO
30 OLD STOW ROAD
HUDSON, MA 01749

BOOK/PAGE:
BOOK 13501, PAGE 418

MAP/PARCEL:
MAP R-1, PARCEL 31

JILLIAN'S LANE
DEFINITIVE SUBDIVISION DEVELOPMENT
STOW, MASSACHUSETTS
PROFILE

NO.	DATE	DESCRIPTION	BY
2	7/7/16	REVISED PER PLANNING BOARD COMMENTS	PJW
3	8/24/16	REVISED PER PLANNING BOARD DECISION	PJW
4	9/27/16	REVISED DRIVEWAY LOCATION	PJW
5	12/6/16	REVISED PER PLANNING BOARD COMMENTS	PJW
6	1/12/17	REVISED PER PLANNING BOARD DECISION	PJW

PREPARED BY:

DUCHARME & DILLIS
Civil Design Group, Inc.
CIVIL ENGINEERS• LAND SURVEYORS• WETLAND CONSULTANTS
1092 MAIN STREET, P.O. BOX 428
BOLTON, MASSACHUSETTS 01740
PHONE: (978) 779-6091 FAX: (978) 779-0260
www.DucharmeandDillis.com

DESIGN BY:	DRAWN BY:	CHECKED BY:	SHEET NO.
GSR	GSR	GSR	5
DATE: 3/18/16	JOB NUMBER: 5139	DRAWING NO. 5139-PROF	OF 11

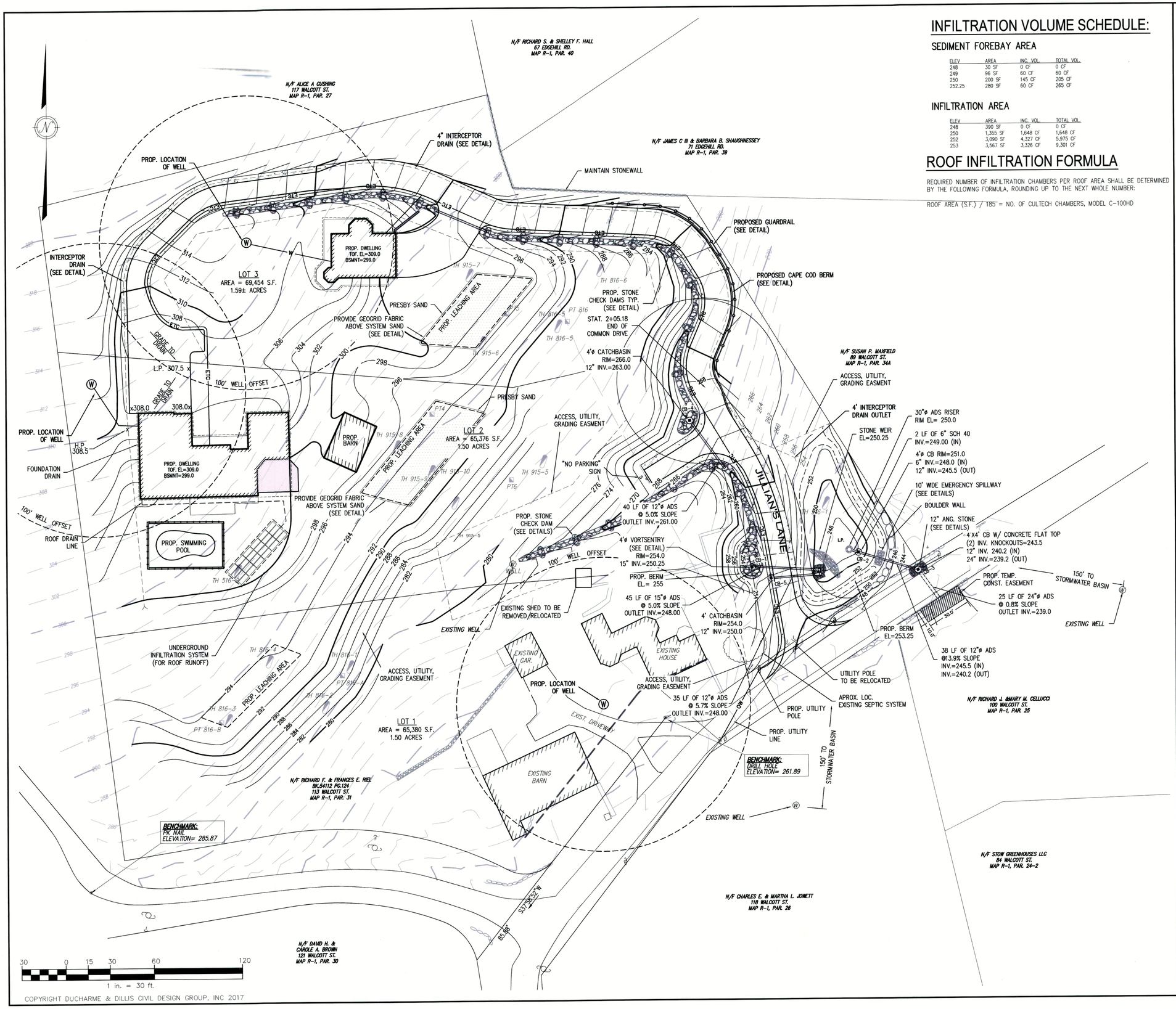

COPYRIGHT DUCHARME & DILLIS CIVIL DESIGN GROUP, INC 2017

INFILTRATION VOLUME SCHEDULE:

SEDIMENT FOREBAY AREA

ELEV	AREA	ING. VOL.	TOTAL VOL.
248	30 SF	0 CF	0 CF
249	96 SF	60 CF	60 CF
250	200 SF	145 CF	205 CF
252.25	280 SF	60 CF	265 CF

INFILTRATION AREA

ELEV	AREA	ING. VOL.	TOTAL VOL.
248	390 SF	0 CF	0 CF
250	1,355 SF	1,648 CF	1,648 CF
252	3,090 SF	4,327 CF	5,975 CF
253	3,567 SF	3,326 CF	9,301 CF

ROOF INFILTRATION FORMULA

REQUIRED NUMBER OF INFILTRATION CHAMBERS PER ROOF AREA SHALL BE DETERMINED BY THE FOLLOWING FORMULA, ROUNDING UP TO THE NEXT WHOLE NUMBER:

ROOF AREA (S.F.) / 185 = NO. OF CULTECH CHAMBERS, MODEL C-100HD

COMMONWEALTH OF MASSACHUSETTS GREGORY S. ROY CIVIL NO. 49 REGISTERED PROFESSIONAL ENGINEER 1/12/17

PROFESSIONAL ENGINEER

COMMONWEALTH OF MASSACHUSETTS STANLEY R. DILLIS 33182 REGISTERED PROFESSIONAL SURVEYOR 1/12/17

PROFESSIONAL LAND SURVEYOR

I CERTIFY THIS PLAN CONFORMS TO THE RULES AND REGULATIONS OF THE REGISTERS OF DEEDS OF THE COMMONWEALTH OF MASSACHUSETTS

RESERVED FOR REGISTRY USE

APPROVAL REQUIRED UNDER THE SUBDIVISION CONTROL LAW
DATE APPROVED: _____

_____)
_____)
_____)
_____) BEING A MAJORITY OF THE STOW PLANNING BOARD
_____)
_____)
_____)

DATE ENDORSED: _____

APPROVED SUBJECT TO CONDITIONS SET FORTH IN A COVENANT EXECUTED BY _____ DATED _____ AND TO BE RECORDED HEREWITH

NO BUILDING OR STRUCTURE SHALL BE BUILT OR PLACED ON ANY LOT WITHOUT A PERMIT FROM THE BOARD OF HEALTH

I, _____, CLERK OF THE TOWN OF STOW HEREBY CERTIFY THAT THE NOTICE OF THE APPROVAL OF THIS PLAN BY THE PLANNING BOARD HAS BEEN RECEIVED AND RECORDED BY THIS OFFICE AND NO APPEAL WAS RECEIVED DURING THE TWENTY (20) DAYS NEXT AFTER RECEIPT AND RECORDING OF SAID NOTICE.

STOW TOWN CLERK DATE

ZONING CLASSIFICATION: **RESIDENTIAL (RES)**

HAMMERHEAD LOTS:

FRONTAGE	= 50'	SETBACKS: FRONT	= 50'
LOT AREA	= 180,000 SQ. FT.	SIDE	= 45'
OPEN SPACE (MIN.)	= 10%	REAR	= 40'
FLOOR AREA RATIO	= NR	LOT SHAPE (MIN.)	= 0.25

CONVENTIONAL LOTS:

FRONTAGE	= 200'	SETBACKS: FRONT	= 30'
LOT AREA	= 65,340 SQ. FT.	SIDE	= 25'
OPEN SPACE (MIN.)	= 10%	REAR	= 40'
FLOOR AREA RATIO	= NR	LOT SHAPE (MIN.)	= 0.40

OWNER: RICHARD F. RIEL
113 WALCOTT STREET
STOW, MA 01775

APPLICANT: ROBERT VISCO
30 OLD STOW ROAD
HUDSON, MA 01749

BOOK/PAGE:
BOOK 13501, PAGE 418

MAP/PARCEL:
MAP R-1, PARCEL 31

JILLIAN'S LANE
DEFINITIVE SUBDIVISION DEVELOPMENT
STOW, MASSACHUSETTS
GRADING PLAN

NO.	DATE	DESCRIPTION	BY
2	7/7/16	REVISED PER PLANNING BOARD COMMENTS	PJW
3	8/24/16	REVISED PER PLANNING BOARD DECISION	PJW
4	9/27/16	REVISED DRIVEWAY LOCATION	PJW
5	12/6/16	REVISED PER PLANNING BOARD COMMENTS	PJW
6	1/12/17	REVISED PER PLANNING BOARD DECISION	PJW

PREPARED BY:

DUCHARME & DILLIS
Civil Design Group, Inc.
CIVIL ENGINEERS• LAND SURVEYORS• WETLAND CONSULTANTS
1092 MAIN STREET, P.O. BOX 428
BOLTON, MASSACHUSETTS 01740
PHONE: (978) 779-6091 FAX: (978) 779-0260
www.DucharmeandDillis.com

DESIGN BY:	DRAWN BY:	CHECKED BY:	SHEET NO.
GSR	GSR	GSR	6
DATE: 3/18/16	JOB NUMBER: 5139	DRAWING NO. 5139-GRAD	OF 11

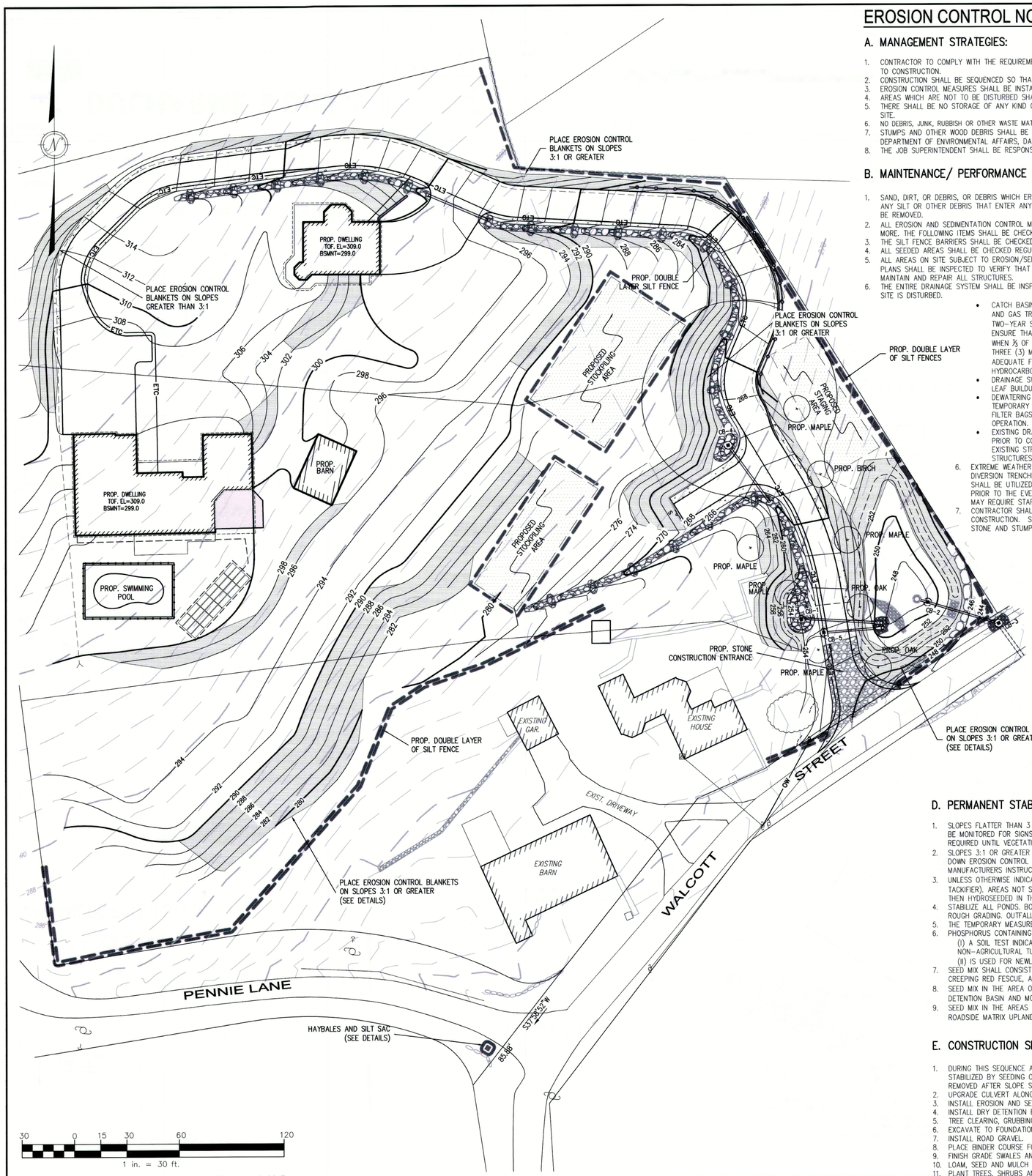

COPYRIGHT DUCHARME & DILLIS CIVIL DESIGN GROUP, INC 2017

EROSION CONTROL NOTES/SPECIFICATIONS:

A. MANAGEMENT STRATEGIES:

1. CONTRACTOR TO COMPLY WITH THE REQUIREMENT OF THE STORMWATER POLLUTION PREVENTION PLAN (SWPPP) WHICH IS REQUIRED TO BE FILED PRIOR TO CONSTRUCTION.
2. CONSTRUCTION SHALL BE SEQUENCED SO THAT GRADING OPERATIONS CAN BEGIN AND END AS QUICKLY AS POSSIBLE.
3. EROSION CONTROL MEASURES SHALL BE INSTALLED PRIOR TO ANY DISTURBANCE ON SITE.
4. AREAS WHICH ARE NOT TO BE DISTURBED SHALL BE CLEARLY MARKED BY FLAGS, SIGNS, ETC. RETAIN EXISTING VEGETATION WHERE FEASIBLE.
5. THERE SHALL BE NO STORAGE OF ANY KIND OF ANY CHEMICALS, PESTICIDES, FUELS AND OTHER POTENTIALLY TOXIC OR HAZARDOUS MATERIALS ON SITE.
6. NO DEBRIS, JUNK, RUBBISH OR OTHER WASTE MATERIALS SHALL BE BURIED ON THE SITE.
7. STUMPS AND OTHER WOOD DEBRIS SHALL BE DISPOSED OF IN ACCORDANCE WITH THE "POLICY ON THE DISPOSAL OF WOOD WASTES" PUBLISHED BY THE DEPARTMENT OF ENVIRONMENTAL AFFAIRS, DATED AUGUST 14, 1987.
8. THE JOB SUPERINTENDENT SHALL BE RESPONSIBLE FOR THE INSTALLATION AND MAINTENANCE OF ALL EROSION AND SEDIMENT CONTROL PRACTICES.

B. MAINTENANCE/ PERFORMANCE STANDARDS:

1. SAND, DIRT, OR DEBRIS, OR DEBRIS WHICH ERODE FROM THE SUBDIVISION ONTO ANY PUBLIC STREET OR PRIVATE PROPERTY SHALL BE CLEANED UP. ANY SILT OR OTHER DEBRIS THAT ENTER ANY EXISTING DRAINAGE SYSTEM INCLUDING CATCHBASIN PUMPS, PIPE LINES, MANHOLES AND DITCHES SHALL BE REMOVED.
2. ALL EROSION AND SEDIMENTATION CONTROL MEASURES SHALL BE INSPECTED WEEKLY AND AFTER EACH RAINFALL WITH AN ACCUMULATION OF ½" OR MORE. THE FOLLOWING ITEMS SHALL BE CHECKED IN PARTICULAR:
3. THE SILT FENCE BARRIERS SHALL BE CHECKED REGULARLY FOR TEARS, DETERIORATION, AND UNDERMINING.
4. ALL SEEDED AREAS SHALL BE CHECKED REGULARLY TO SEE THAT A GOOD STAND IS MAINTAINED. AREAS SHOULD BE RESEEDED AS NEEDED.
5. ALL AREAS ON SITE SUBJECT TO EROSION/SEDIMENTATION SHALL BE INSPECTED ON A REGULAR BASIS. ALL ITEMS SPECIFIED ON THIS AND OTHER PLANS SHALL BE INSPECTED TO VERIFY THAT THEY ARE OPERATING AS DESIGNED AND INTENDED. IT SHALL BE THE CONTRACTORS RESPONSIBILITY TO MAINTAIN AND REPAIR ALL STRUCTURES.
6. THE ENTIRE DRAINAGE SYSTEM SHALL BE INSPECTED ON A REGULAR BASIS AND PRIOR TO AND IMMEDIATELY AFTER ANY RAINFALL EVENT WHILE THE SITE IS DISTURBED.
   - CATCH BASIN SHALL BE INSPECTED WEEKLY TO ENSURE IT IS WATER TIGHT, HAS ADEQUATE SUMP CAPACITY, THAT OIL AND GAS TRAPS ARE IN PLACE. IT SHALL ALSO BE INSPECTED AFTER EVERY SIGNIFICANT RAINFALL EVENT (I.E. A TWO-YEAR STORM EVENT OR GREATER) DURING THE FIRST THREE (3) MONTHS OF BEING PLACED IN SERVICE TO ENSURE THAT IT IS FUNCTIONING IN AN ADEQUATE FASHION. THE BASIN SHALL BE CLEANED WITH A VACUUM TRUCK WHEN ⅓ OF THE SUMP IS FILLED WITH SEDIMENT BUT NOT LESS THAN TWO (2) TIMES PER YEAR. AFTER THE FIRST THREE (3) MONTHS OF SERVICE THE BASIN SHALL BE INSPECTED NOT LESS THAN ONE (1) TIME PER YEAR TO ENSURE ADEQUATE FUNCTIONALITY. OIL/GAS TRAPS SHALL BE CLEANED WITH A VACUUM TRUCK AND MONITORED FOR HYDROCARBON BUILD UP SEMIANNUALLY
   - DRAINAGE SWALES DURING CONSTRUCTION SHALL BE INSPECTED MONTHLY FOR EROSION, SEDIMENT ACCUMULATION AND LEAF BUILDUP. ALL ERODED AREAS SHALL BE STABILIZED. SEDIMENT SHALL BE REMOVED AND LEAF LITTER REMOVED
   - DEWATERING OF EXCAVATIONS DURING CONSTRUCTION SHALL BE ADDRESSED ON AN INDIVIDUAL BASIS AS NEEDED. IF TEMPORARY DEWATERING IS REQUIRED ON THE SITE, SEDIMENT BASINS SHALL BE CONSTRUCTED OR GEOTEXTILE FABRIC FILTER BAGS SHALL BE UTILIZED. FILTER BAGS AND SEDIMENT BASINS SHALL BE MAINTAINED DURING THE DEWATERING OPERATION.
   - EXISTING DRAINAGE STRUCTURES DOWN GRADIENT OF THE SITE SHALL BE INSPECTED AND CLEANED IF NECESSARY PRIOR TO CONSTRUCTION. PROOF OF SUCH CLEANING SHALL BE PROVIDED TO THE CONSERVATION COMMISSION. EXISTING STRUCTURES SHALL BE INSPECTED MONTHLY AND AFTER EVERY RAIN EVENT WHILE THE SITE IS DISTURBED. STRUCTURES SHALL BE CLEANED AS REQUIRED.
6. EXTREME WEATHER – IN ADVANCE OF FORECASTED HEAVY RAIN EVENTS, TEMPORARY MEASURES SUCH AS CHECK DAMS, DIVERSION TRENCHES, DOUBLED-UP EROSION CONTROL DOWN GRADIENT OF DISCHARGE POINTS AND UNSTABLE SURFACES SHALL BE UTILIZED UNTIL THE SITE IS STABILIZED. SILT SACKS INSTALLED IN DRAINAGE STRUCTURES SHALL BE CLEANED PRIOR TO THE EVENT. CONTRACTOR IS RESPONSIBLE FOR MAINTAINING EROSION CONTROLS DURING EXTREME EVENTS WHICH MAY REQUIRE STAFFED ONSITE INSPECTIONS AND REMEDIAL ACTIONS DURING THE STORM EVENT.
7. CONTRACTOR SHALL MAINTAIN A STOCKPILE OF ADDITIONAL EROSION CONTROL MEASURES ON SITE THROUGHOUT CONSTRUCTION. SUCH MEASURES ARE TO INCLUDE STRAW BALES, WATTLES, SILT FENCE, GEOTEXTILE FILTER BAGS, CRUSHED STONE AND STUMP GRINDINGS.

C. TEMPORARY MEASURES:

1. PLACE SILT FENCES AS SHOWN ON THE EROSION CONTROL PLAN. SILT FENCES SHALL BE DOUBLED UP, SEPARATED BY 1–2'. SEDIMENT SHALL BE REMOVED ONCE THE VOLUME REACHES 1/4 OF THE HEIGHT OF SILT FENCE OR STRAW BALES.
2. PLACE CHECK DAMS IN SWALES AND ON EXPOSED ROAD SECTIONS AS REQUIRED BY THE TOWN OF STOW REGULATIONS.
3. DURING DRY PERIODS, PROVIDE MEANS FOR MITIGATION OF DUST, SUCH AS WATERING OF EXPOSED AREAS.
4. PROTECT CATCH BASIN WITH SEDIMENT TRAPS AS SHOWN.
5. IF LOAM IN PLACED OUTSIDE OF THE NORMAL GROWING SEASON SILT FENCE OR STRAW WADDLES SHALL BE PLACED BETWEEN THE LAWN AREA AND PAVEMENT.
6. DURING DRY PERIODS, PROVIDE MEANS FOR MITIGATION OF DUST, SUCH AS WATERING OF EXPOSED AREAS.
7. STOCKPILE LOCATIONS SHALL BE WITHIN THE PROPOSED LIMIT OF WORK. PLACE SILT FENCE AROUND ALL STOCK PILE AREAS. PILES LEFT FOR 21 DAYS OR MORE SHALL BE SEEDED OR COVER WITH PLASTIC SHEETING.
8. WASTE DISPOSAL RECEPTACLES AND TRAILERS WILL BE USED FOR THE DISPOSAL OF CONSTRUCTION DEBRIS, WHICH WILL BE REMOVED FROM SITE ACCORDING TO STATE, LOCAL AND FEDERAL GUIDELINES. CONSTRUCTION DEBRIS WILL INCLUDE PAVEMENT, UTILITY, EARTH AND BUILDING MATERIALS THAT CANNOT BE REUSED. THE RECEPTACLES WILL BE LOCATED ON-SITE AND COVERED,
9. A COMBINATION OF THE USE OF STUMP GRINDINGS, WINTER RYE PLANTINGS, EROSION CONTROL MATS, AND DENSE MAT OF STRAW MULCH WITH TACKIFIER ETC. SHALL BE USED IN THE EVENT THE VEGETATION IS NOT FULLY ESTABLISHED BY THE ONSET OF WINTER.

D. PERMANENT STABILIZATION:

1. SLOPES FLATTER THAN 3 TO 1 SHALL BE LOAMED (6" MIN.) AND HYDROSEEDED (WITH MULCH & TACKIFIER). SLOPES SHALL BE MONITORED FOR SIGNS OF WASHOUT. PROVIDE ADDITIONAL MULCHING OR OTHER ACCEPTABLE SLOPE PROTECTION AS REQUIRED UNTIL VEGETATION IS ESTABLISHED.
2. SLOPES 3:1 OR GREATER SHALL BE RESTORED WITH 6" OF LOAM (MIN.), HYDROSEED (WITH MULCH & TACKIFIER) AND STAKED DOWN EROSION CONTROL BLANKET SIMILAR TO NORTH AMERICAN GREEN SC 150 BN. INSTALL IN ACCORDANCE WITH THE MANUFACTURERS INSTRUCTIONS.
3. UNLESS OTHERWISE INDICATED HEREON ALL DISTURBED AREAS SHALL BE LOAMED (6" MIN.) AND HYDROSEEDED (WITH MULCH & TACKIFIER). AREAS NOT STABILIZED BEFORE THE END OF THE FALL PLANTING SEASON SHALL BE STABILIZED WITH MULCH, THEN HYDROSEEDED IN THE SPRING.
4. STABILIZE ALL PONDS. BOTTOM AND SIDE SLOPES OF PONDS SHALL BE STABILIZED WITHIN ONE WEEK OF COMPLETION OF ROUGH GRADING. OUTFALLS SHALL BE STABILIZED WITHIN ONE WEEK OF PIPE PLACEMENT.
5. THE TEMPORARY MEASURES WILL NOT BE REMOVED UNTIL PERMANENT STABILIZATION HAS OCCURRED.
6. PHOSPHORUS CONTAINING FERTILIZER MAY ONLY BE APPLIED TO LAWN OR NON-AGRICULTURAL TURF WHEN
   (I) A SOIL TEST INDICATES THAT ADDITIONAL PHOSPHORUS IS NEEDED FOR THE GROWTH OF THAT LAWN OR NON-AGRICULTURAL TURF; OR
   (II) IS USED FOR NEWLY ESTABLISHED LAWN OR NON-AGRICULTURAL TURF DURING THE FIRST GROWING SEASON.
7. SEED MIX SHALL CONSIST OF LAWNPRO MIX BY PRO-LAWN SUPPLY OR EQUAL, CONSISTING OF 35% PERENNIAL RYE, 35% CREEPING RED FESCUE, AND 30% KENTUCKY BLUE GRASS.
8. SEED MIX IN THE AREA OF THE DETENTION BASIN SHALL CONSIST OF "NEW ENGLAND EROSION CONTROL/RESTORATION MIX FOR DETENTION BASIN AND MOIST" AS DESIGNED BY NEW ENGLAND WETLAND PLANTS, INC.
9. SEED MIX IN THE AREAS ALONG THE COMMON DRIVEWAY ON SLOPES GREATER THEN 3:1 SHALL CONSIST OF "NEW ENGLAND ROADSIDE MATRIX UPLAND SEED MIX" AS DESIGNED BY NEW ENGLAND WETLAND PLANTS, INC.

E. CONSTRUCTION SEQUENCE:

1. DURING THIS SEQUENCE ALL EROSION CONTROLS SHALL BE INSPECTED AND MAINTAINED. ALL DISTURBED AREAS SHALL BE STABILIZED BY SEEDING OR SODDING AS SOON AS POSSIBLE AFTER GRADING IS COMPLETE. EROSION BARRIERS SHALL BE REMOVED AFTER SLOPE STABILIZATION IS COMPLETE.
2. UPGRADE CULVERT ALONG WALCOTT STREET PRIOR TO ANY SITE WORK.
3. INSTALL EROSION AND SEDIMENT CONTROL MEASURES.
4. INSTALL DRY DETENTION BASIN AND MAINTAIN THROUGHOUT CONSTRUCTION.
5. TREE CLEARING, GRUBBING AND STUMP REMOVAL.
6. EXCAVATE TO FOUNDATION IN CUT SECTIONS; BRING FILL SECTIONS TO SUBGRADE USING EXCAVATED SOIL.
7. INSTALL ROAD GRAVEL.
8. PLACE BINDER COURSE FOR ROADWAY.
9. FINISH GRADE SWALES AND INFILTRATION BASINS.
10. LOAM, SEED AND MULCH DISTURBED AREAS INCLUDING SWALES.
11. PLANT TREES, SHRUBS AND GROUND COVER AS INDICATED ON PLANS.

RESERVED FOR REGISTRY USE

COMMONWEALTH OF MASSACHUSETTS GREGORY J. GUDY CIVIL No. 46070 REGISTERED PROFESSIONAL ENGINEER
1/12/17
PROFESSIONAL ENGINEER

COMMONWEALTH OF MASSACHUSETTS STANLEY R. DILLIS 33182 PROFESSIONAL LAND SURVEYOR
1/12/17
PROFESSIONAL LAND SURVEYOR

I CERTIFY THIS PLAN CONFORMS TO THE RULES AND REGULATIONS OF THE REGISTERS OF DEEDS OF THE COMMONWEALTH OF MASSACHUSETTS

APPROVAL REQUIRED UNDER THE SUBDIVISION CONTROL LAW
DATE APPROVED: _____

_____)
_____)
_____)
_____) BEING A MAJORITY OF THE STOW PLANNING BOARD
_____)
_____)
_____)

DATE ENDORSED: _____

APPROVED SUBJECT TO CONDITIONS SET FORTH IN A COVENANT EXECUTED BY _____ DATED _____ AND TO BE RECORDED HEREWITH

NO BUILDING OR STRUCTURE SHALL BE BUILT OR PLACED ON ANY LOT WITHOUT A PERMIT FROM THE BOARD OF HEALTH

I, _____, CLERK OF THE TOWN OF STOW HEREBY CERTIFY THAT THE NOTICE OF THE APPROVAL OF THIS PLAN BY THE PLANNING BOARD HAS BEEN RECEIVED AND RECORDED BY THIS OFFICE AND NO APPEAL WAS RECEIVED DURING THE TWENTY (20) DAYS NEXT AFTER RECEIPT AND RECORDING OF SAID NOTICE.

_____
STOW TOWN CLERK DATE

ZONING CLASSIFICATION: RESIDENTIAL (RES)

HAMMERHEAD LOTS:

FRONTAGE	= 50'	SETBACKS: FRONT	= 50'
LOT AREA	= 180,000 SQ. FT.	SIDE	= 45'
OPEN SPACE (MIN.)	= 10%	REAR	= 40'
FLOOR AREA RATIO	= NR	LOT SHAPE (MIN.)	= 0.25

CONVENTIONAL LOTS:

FRONTAGE	= 200'	SETBACKS: FRONT	= 30'
LOT AREA	= 65,340 SQ. FT.	SIDE	= 25'
OPEN SPACE (MIN.)	= 10%	REAR	= 40'
FLOOR AREA RATIO	= NR	LOT SHAPE (MIN.)	= 0.40

OWNER: RICHARD F. RIEL
113 WALCOTT STREET
STOW, MA 01775

APPLICANT: ROBERT VISCO
30 OLD STOW ROAD
HUDSON, MA 01749

BOOK/PAGE: BOOK 13501, PAGE 418

MAP/PARCEL: MAP R-1, PARCEL 31

JILLIAN'S LANE
DEFINITIVE SUBDIVISION DEVELOPMENT
STOW, MASSACHUSETTS
EROSION CONTROL PLAN

NO.	DATE	DESCRIPTION	BY
2	7/7/16	REVISED PER PLANNING BOARD COMMENTS	PJW
3	8/24/16	REVISED PER PLANNING BOARD DECISION	PJW
4	9/27/16	REVISED DRIVEWAY LOCATION	PJW
5	12/6/16	REVISED PER PLANNING BOARD COMMENTS	PJW
6	1/12/17	REVISED PER PLANNING BOARD DECISION	PJW

PREPARED BY:
DUCHARME & DILLIS
Civil Design Group, Inc.
CIVIL ENGINEERS• LAND SURVEYORS• WETLAND CONSULTANTS
1092 MAIN STREET, P.O. BOX 428
BOLTON, MASSACHUSETTS 01740
PHONE: (978) 779-6091 FAX: (978) 779-0260
www.DucharmeandDillis.com

DESIGN BY:	DRAWN BY:	CHECKED BY:	SHEET NO.
GSR	GSR	GSR	7
DATE: 3/18/16	JOB NUMBER: 5139	DRAWING NO. 5139-ECP	OF 11

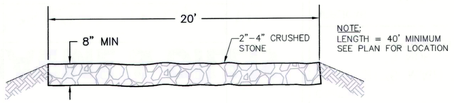

TEMP. CONSTRUCTION ENTRANCE DETAIL

NOT TO SCALE

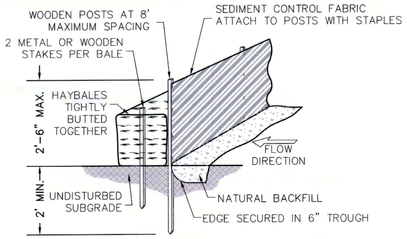

SILTATION BARRIER

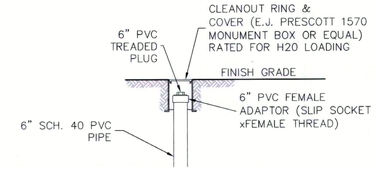

OBSERVATION PORT DETAIL

NOT TO SCALE

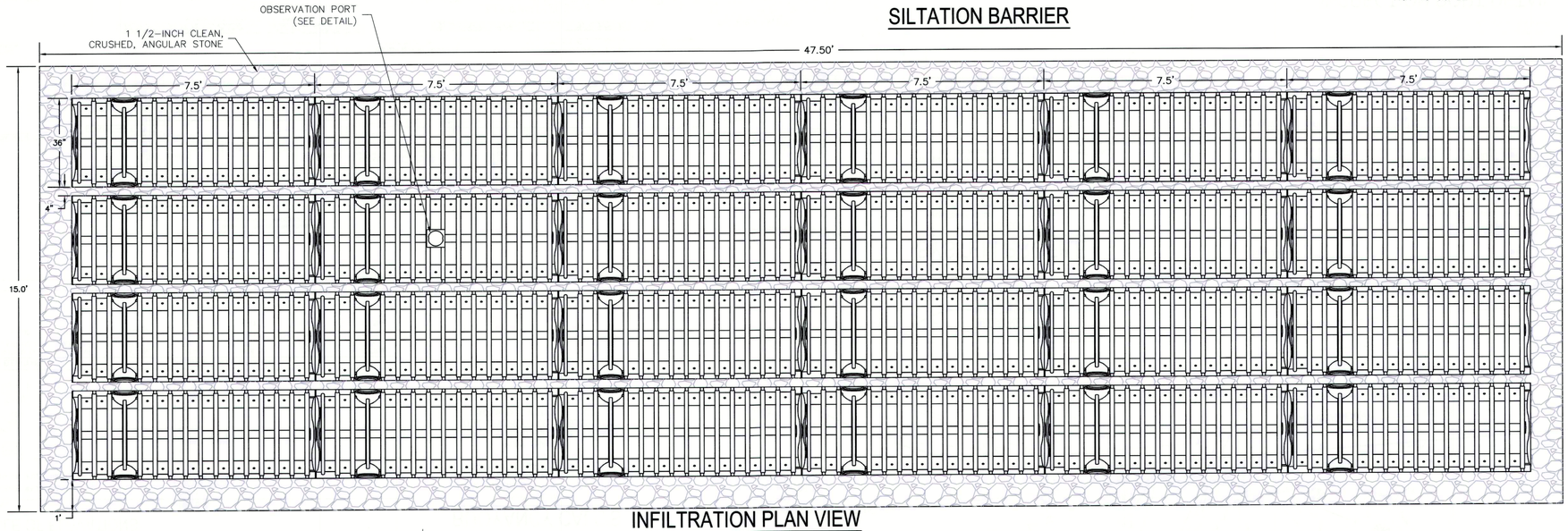

INFILTRATION PLAN VIEW

NOT TO SCALE

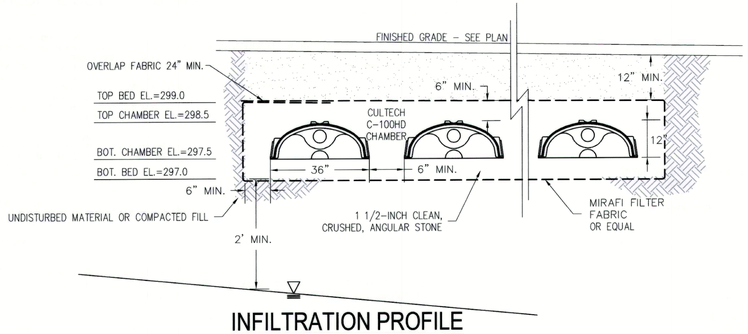

INFILTRATION PROFILE

NOT TO SCALE

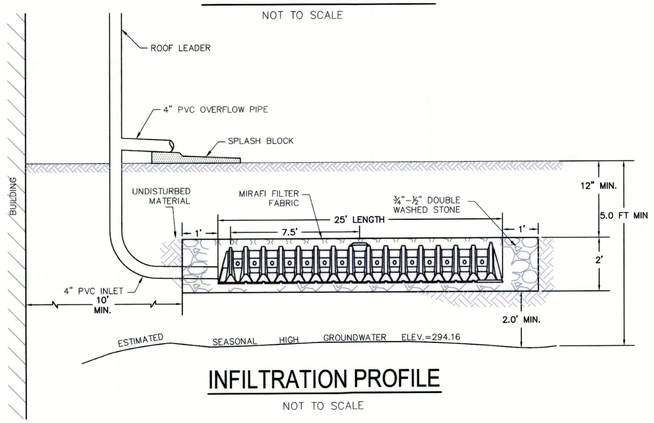

INFILTRATION PROFILE

NOT TO SCALE

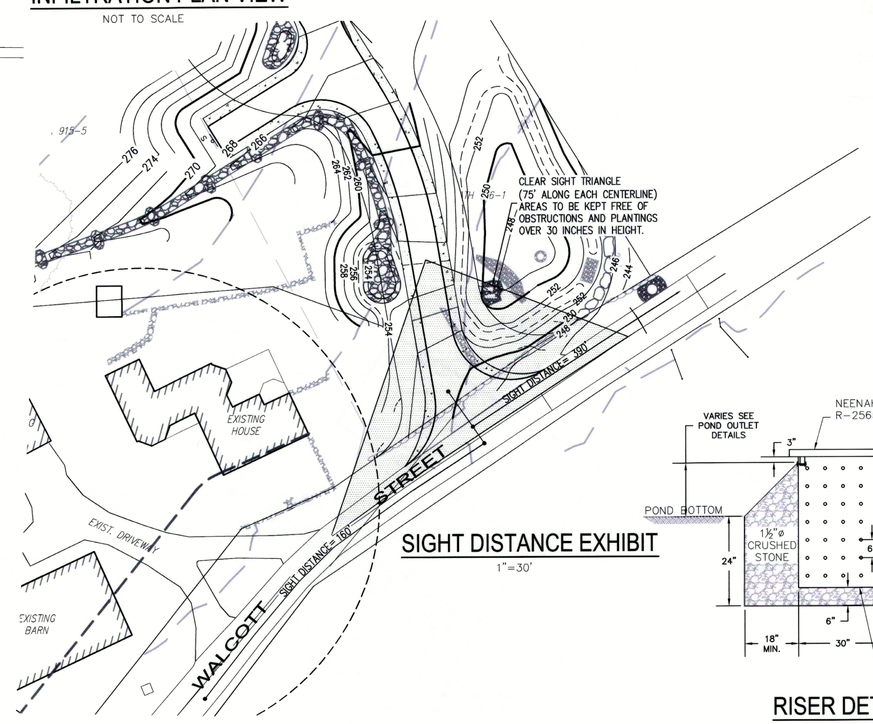

SIGHT DISTANCE EXHIBIT

1"=30'

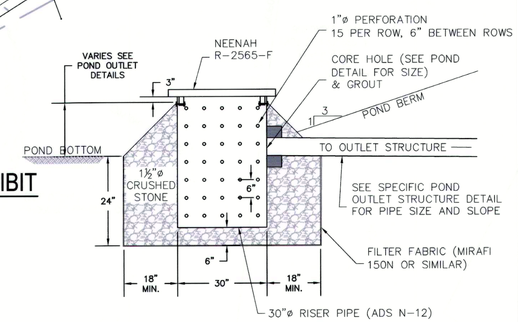

RISER DETAIL

SCALE: 1" = 2'

COPYRIGHT DUCHARME & DILLIS CIVIL DESIGN GROUP, INC 2017

COMMONWEALTH OF MASSACHUSETTS GREGORY S. ROY CIVIL 46070 REGISTERED PROFESSIONAL ENGINEER

1/12/17

PROFESSIONAL ENGINEER

COMMONWEALTH OF MASSACHUSETTS STANLEY R. DILLIS 33162 PROFESSIONAL LAND SURVEYOR

1/12/17

PROFESSIONAL LAND SURVEYOR

I CERTIFY THIS PLAN CONFORMS TO THE RULES AND REGULATIONS OF THE REGISTERS OF DEEDS OF THE COMMONWEALTH OF MASSACHUSETTS

RESERVED FOR REGISTRY USE

APPROVAL REQUIRED UNDER THE SUBDIVISION CONTROL LAW
DATE APPROVED: _____

_____)
_____)
_____)
_____) BEING A MAJORITY OF THE STOW PLANNING BOARD
_____)
_____)
_____)

DATE ENDORSED: _____

APPROVED SUBJECT TO CONDITIONS SET FORTH IN A COVENANT EXECUTED BY _____ DATED _____ AND TO BE RECORDED HEREWITH

NO BUILDING OR STRUCTURE SHALL BE BUILT OR PLACED ON ANY LOT WITHOUT A PERMIT FROM THE BOARD OF HEALTH

I, _____, CLERK OF THE TOWN OF STOW HEREBY CERTIFY THAT THE NOTICE OF THE APPROVAL OF THIS PLAN BY THE PLANNING BOARD HAS BEEN RECEIVED AND RECORDED BY THIS OFFICE AND NO APPEAL WAS RECEIVED DURING THE TWENTY (20) DAYS NEXT AFTER RECEIPT AND RECORDING OF SAID NOTICE.

STOW TOWN CLERK _____ DATE _____

ZONING CLASSIFICATION: **RESIDENTIAL (RES)**

HAMMERHEAD LOTS:

FRONTAGE	= 50'	SETBACKS: FRONT	= 50'
LOT AREA	= 180,000 SQ. FT.	SIDE	= 45'
OPEN SPACE (MIN.)	= 10%	REAR	= 40'
FLOOR AREA RATIO	= NR	LOT SHAPE (MIN.)	= 0.25

CONVENTIONAL LOTS:

FRONTAGE	= 200'	SETBACKS: FRONT	= 30'
LOT AREA	= 65,340 SQ. FT.	SIDE	= 25'
OPEN SPACE (MIN.)	= 10%	REAR	= 40'
FLOOR AREA RATIO	= NR	LOT SHAPE (MIN.)	= 0.40

OWNER: RICHARD F. RIEL
113 WALCOTT STREET
STOW, MA 01775

APPLICANT: ROBERT VISCO
30 OLD STOW ROAD
HUDSON, MA 01749

BOOK/PAGE:
BOOK 13501, PAGE 418

MAP/PARCEL:
MAP R-1, PARCEL 31

JILLIAN'S LANE
DEFINITIVE SUBDIVISION DEVELOPMENT
STOW, MASSACHUSETTS
DETAIL SHEET

NO.	DATE	DESCRIPTION	BY
2	7/7/16	REVISED PER PLANNING BOARD COMMENTS	PJW
3	8/24/16	REVISED PER PLANNING BOARD DECISION	PJW
4	9/27/16	REVISED DRIVEWAY LOCATION	PJW
5	12/6/16	REVISED PER PLANNING BOARD COMMENTS	PJW
6	1/12/17	REVISED PER PLANNING BOARD DECISION	PJW

PREPARED BY:

DUCHARME & DILLIS
Civil Design Group, Inc.
CIVIL ENGINEERS • LAND SURVEYORS • WETLAND CONSULTANTS
1092 MAIN STREET, P.O. BOX 428
BOLTON, MASSACHUSETTS 01740
PHONE: (978) 779-6091 FAX: (978) 779-0260
www.DucharmeandDillis.com

DESIGN BY:	DRAWN BY:	CHECKED BY:	SHEET NO.
GSR	GSR	GSR	8
DATE: 3/18/16	JOB NUMBER: 5139	DRAWING NO. 5139-DET	OF 11

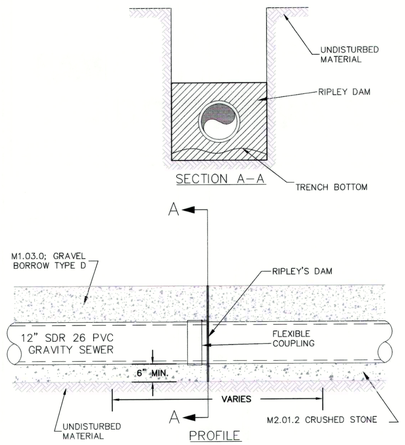

ANTI-SEEP COLLAR DETAIL

NOT TO SCALE

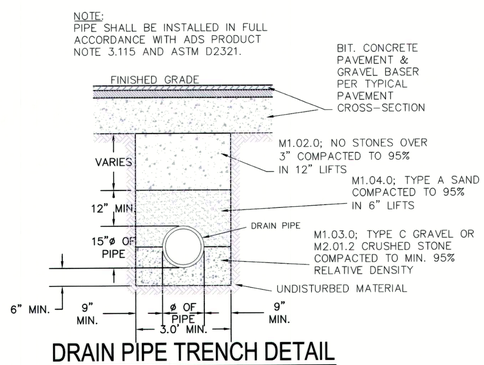

DRAIN PIPE TRENCH DETAIL

NOT TO SCALE

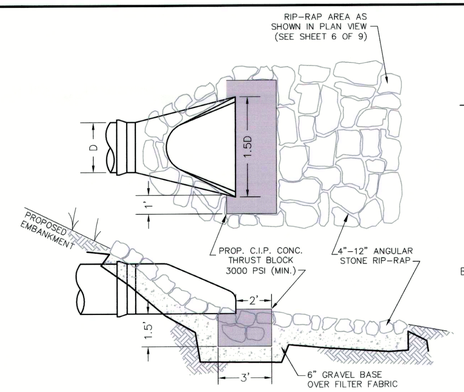

FLARED END SECTION

NOT TO SCALE

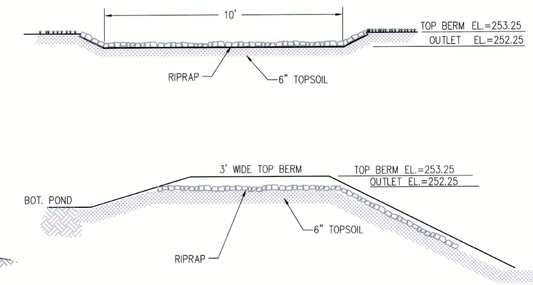

EMERGENCY SPILLWAY

NOT TO SCALE

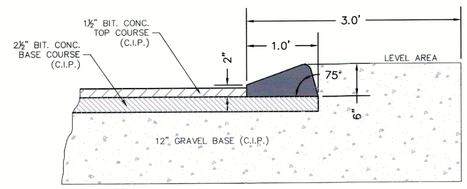

BITUMINOUS CONCRETE CURB DETAIL

NOT TO SCALE

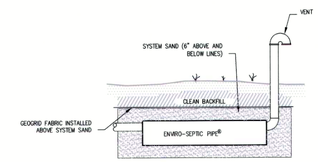

GEOGRID FABRIC DETAIL

NOT TO SCALE

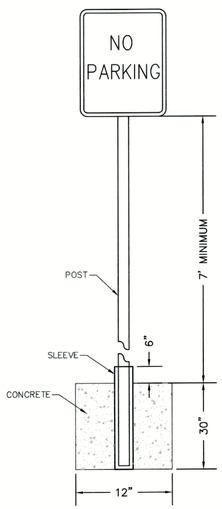

NOTE:
1. 24"x30" "NO PARKING" SIGN (R8-3A) PER MUTCD
2. SIGN POSTS SHALL BE 2 INCH GALVANIZED ROUND PIPE 0.095 INCH WALL THICKNESS.
3. CONCRETE SHALL BE CLASS 3000, FINISH TO MATCH EXISTING SIDEWALK.

"NO PARKING" SIGN DETAIL

NOT TO SCALE

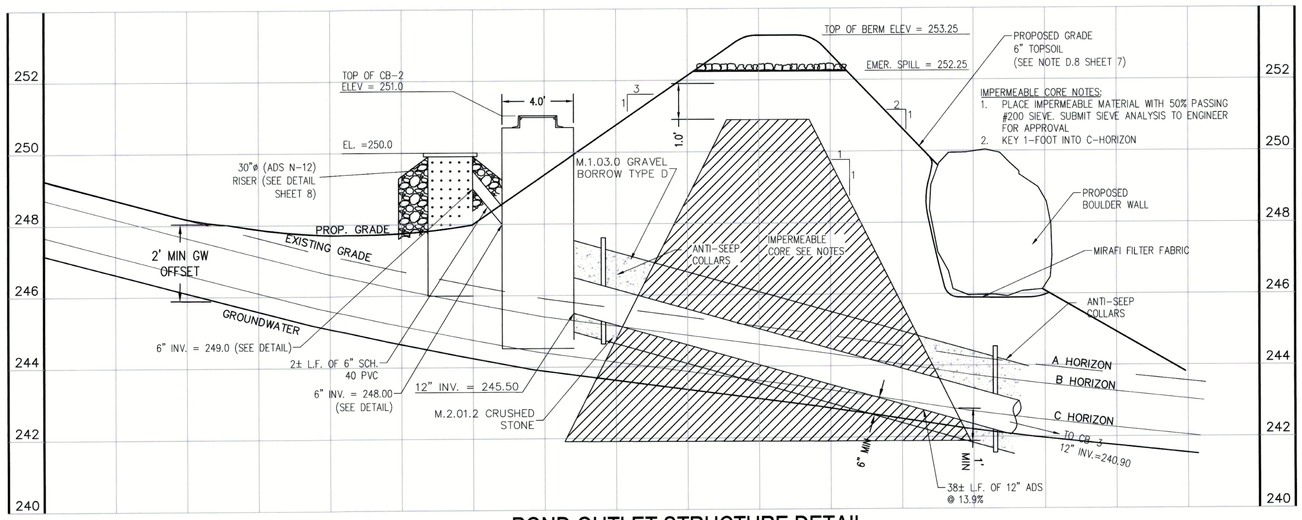

POND OUTLET STRUCTURE DETAIL

SCALE 1"–4'

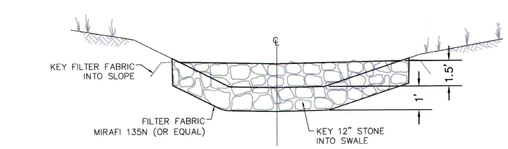

NOTE:
CHECK DAM SHALL BE PROVIDED AT 25' INTERVALS ALONG THE SWALE IN LOCATIONS INDICATED ON THE GRADING PLAN.

CROSS-SECTION

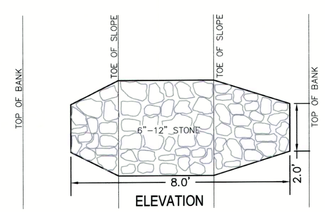

ELEVATION

CHECK DAM DETAIL

SCALE: NOT TO SCALE

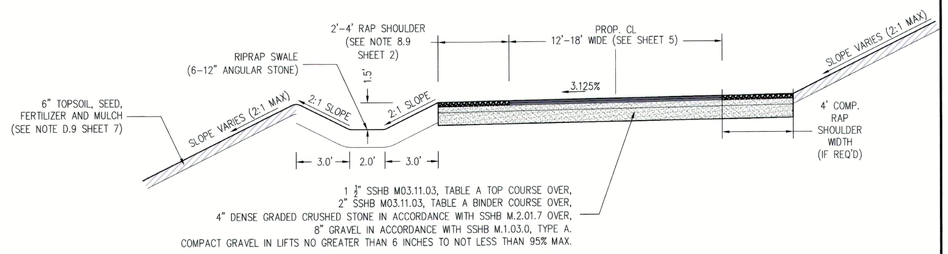

DRIVEWAY CROSS SECTION DETAIL

1"=4'

COPYRIGHT DUCHARME & DILLIS CIVIL DESIGN GROUP, INC 2017

COMMONWEALTH OF MASSACHUSETTS GREGORY S. ROY No. 46075 REGISTERED PROFESSIONAL ENGINEER 1/12/17

PROFESSIONAL ENGINEER

COMMONWEALTH OF MASSACHUSETTS STANLEY R. DILLIS 33182 PROFESSIONAL LAND SURVEYOR 1/12/17

PROFESSIONAL LAND SURVEYOR

I CERTIFY THIS PLAN CONFORMS TO THE RULES AND REGULATIONS OF THE REGISTERS OF DEEDS OF THE COMMONWEALTH OF MASSACHUSETTS

RESERVED FOR REGISTRY USE

APPROVAL REQUIRED UNDER THE SUBDIVISION CONTROL LAW
DATE APPROVED: _____

_____)
_____)
_____)
_____) BEING A MAJORITY OF THE STOW PLANNING BOARD
_____)
_____)
_____)

DATE ENDORSED: _____

APPROVED SUBJECT TO CONDITIONS SET FORTH IN A COVENANT EXECUTED BY _____
DATED _____ AND TO BE RECORDED HEREWITH

NO BUILDING OR STRUCTURE SHALL BE BUILT OR PLACED ON ANY LOT WITHOUT A PERMIT FROM THE BOARD OF HEALTH

I, _____, CLERK OF THE TOWN OF STOW HEREBY CERTIFY THAT THE NOTICE OF THE APPROVAL OF THIS PLAN BY THE PLANNING BOARD HAS BEEN RECEIVED AND RECORDED BY THIS OFFICE AND NO APPEAL WAS RECEIVED DURING THE TWENTY (20) DAYS NEXT AFTER RECEIPT AND RECORDING OF SAID NOTICE.

_____
STOW TOWN CLERK DATE

ZONING CLASSIFICATION: **RESIDENTIAL (RES)**

HAMMERHEAD LOTS:

FRONTAGE	= 50'	SETBACKS: FRONT	= 50'
LOT AREA	= 180,000 SQ. FT.	SIDE	= 45'
OPEN SPACE (MIN.)	= 10%	REAR	= 40'
FLOOR AREA RATIO	= NR	LOT SHAPE (MIN.)	= 0.25

CONVENTIONAL LOTS:

FRONTAGE	= 200'	SETBACKS: FRONT	= 30'
LOT AREA	= 65,340 SQ. FT.	SIDE	= 25'
OPEN SPACE (MIN.)	= 10%	REAR	= 40'
FLOOR AREA RATIO	= NR	LOT SHAPE (MIN.)	= 0.40

OWNER: RICHARD F. RIEL
113 WALCOTT STREET
STOW, MA 01775

APPLICANT: ROBERT VISCO
30 OLD STOW ROAD
HUDSON, MA 01749

BOOK/PAGE:
BOOK 13501, PAGE 418

MAP/PARCEL:
MAP R-1, PARCEL 31

JILLIAN'S LANE
DEFINITIVE SUBDIVISION DEVELOPMENT
STOW, MASSACHUSETTS
DETAIL SHEET

NO.	DATE	DESCRIPTION	BY
2	7/7/16	REVISED PER PLANNING BOARD COMMENTS	PJW
3	8/24/16	REVISED PER PLANNING BOARD DECISION	PJW
4	9/27/16	REVISED DRIVEWAY LOCATION	PJW
5	12/6/16	REVISED PER PLANNING BOARD COMMENTS	PJW
6	1/12/17	REVISED PER PLANNING BOARD DECISION	PJW

PREPARED BY:
DUCHARME & DILLIS
Civil Design Group, Inc.
CIVIL ENGINEERS• LAND SURVEYORS• WETLAND CONSULTANTS
1092 MAIN STREET, P.O. BOX 428
BOLTON, MASSACHUSETTS 01740
PHONE: (978) 779-6091 FAX: (978) 779-0260
www.DucharmeandDillis.com

DESIGN BY:	DRAWN BY:	CHECKED BY:	SHEET NO.
GSR	GSR	GSR	9
DATE: 3/18/16	JOB NUMBER: 5139	DRAWING NO. 5139-DET	OF 11

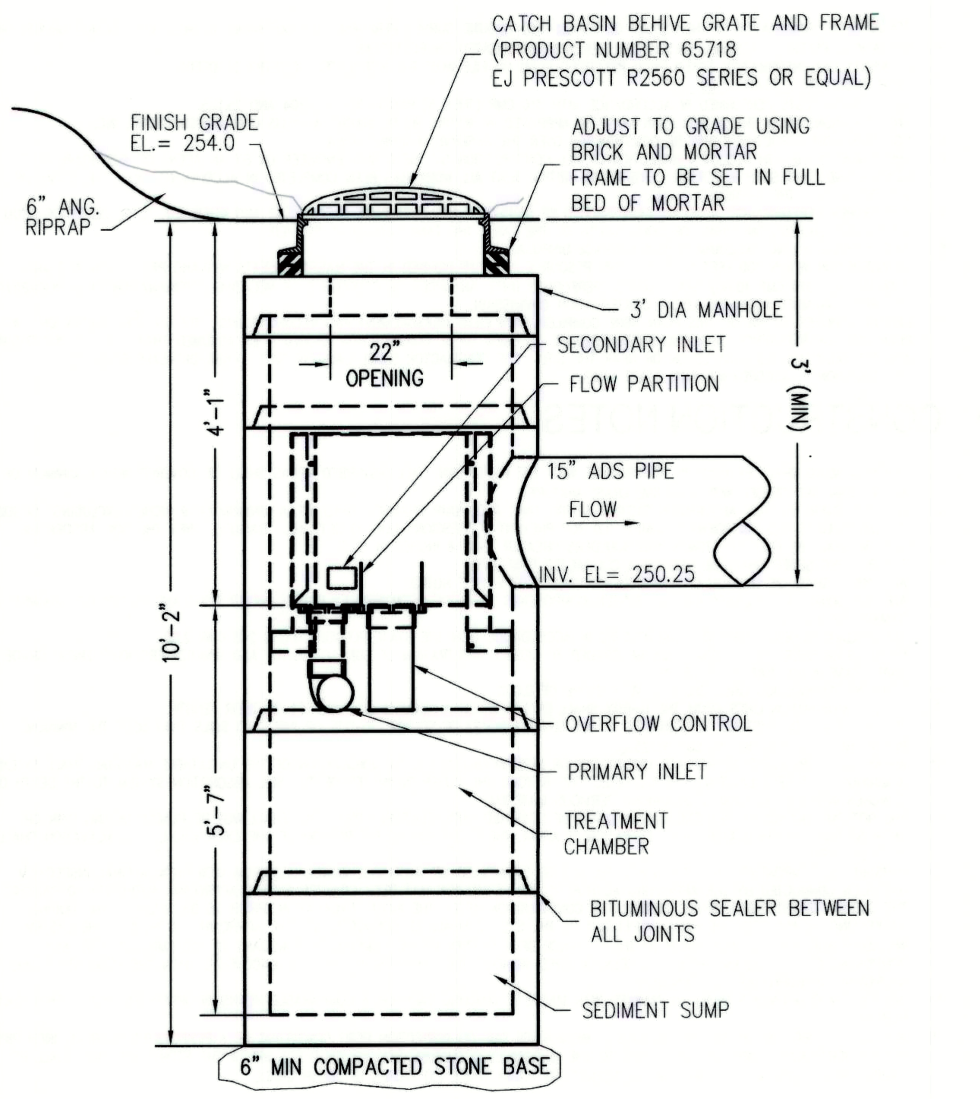

CB-1 VORTSENTRY WATER TREATMENT UNIT

NOT TO SCALE

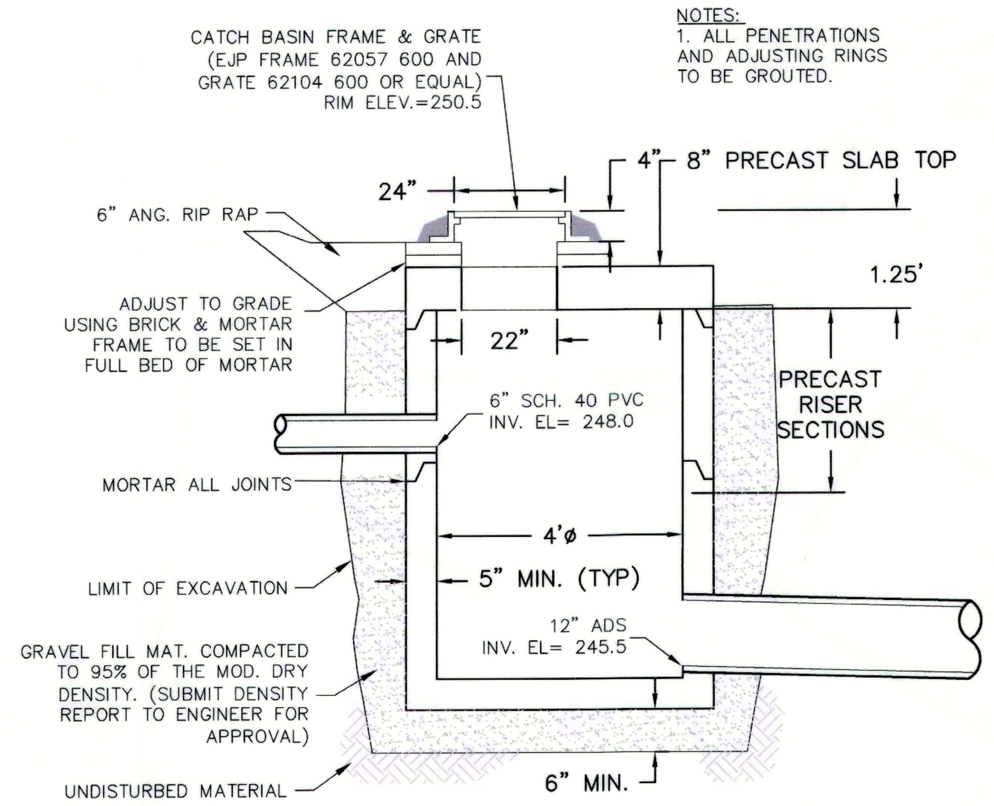

CB-2 FIELD BASIN GRATE AND CULVERT

NOT TO SCALE

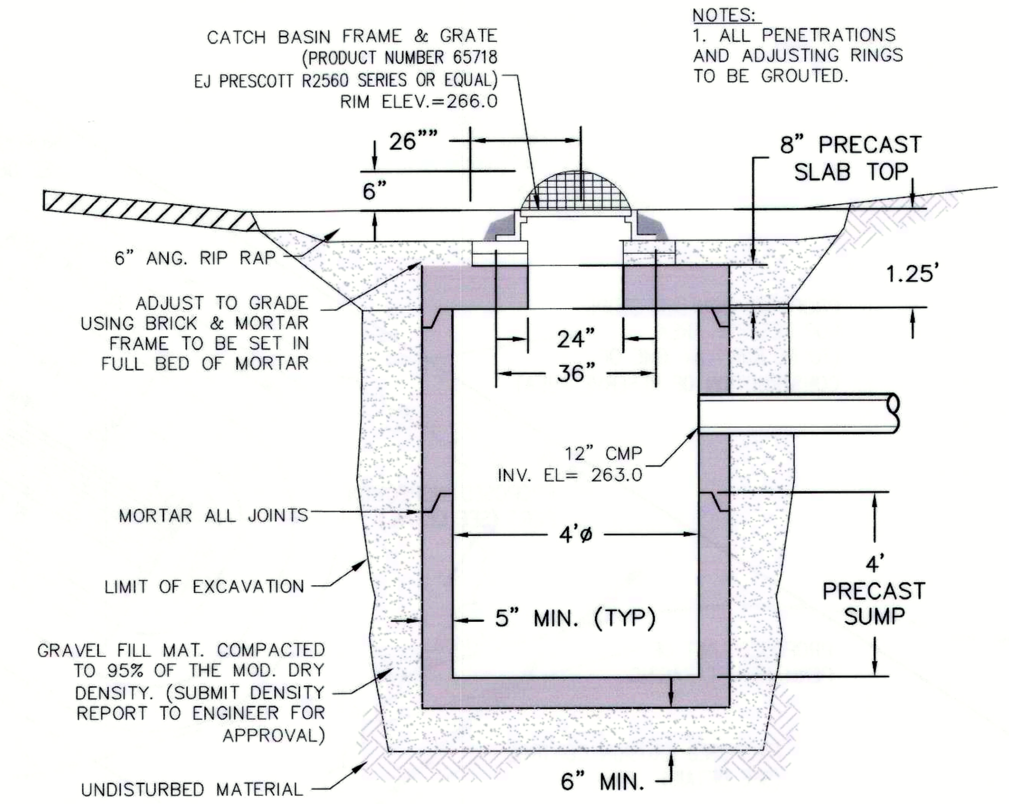

CB-4 FIELD BASIN W/ BEEHIVE GRATE

NOT TO SCALE

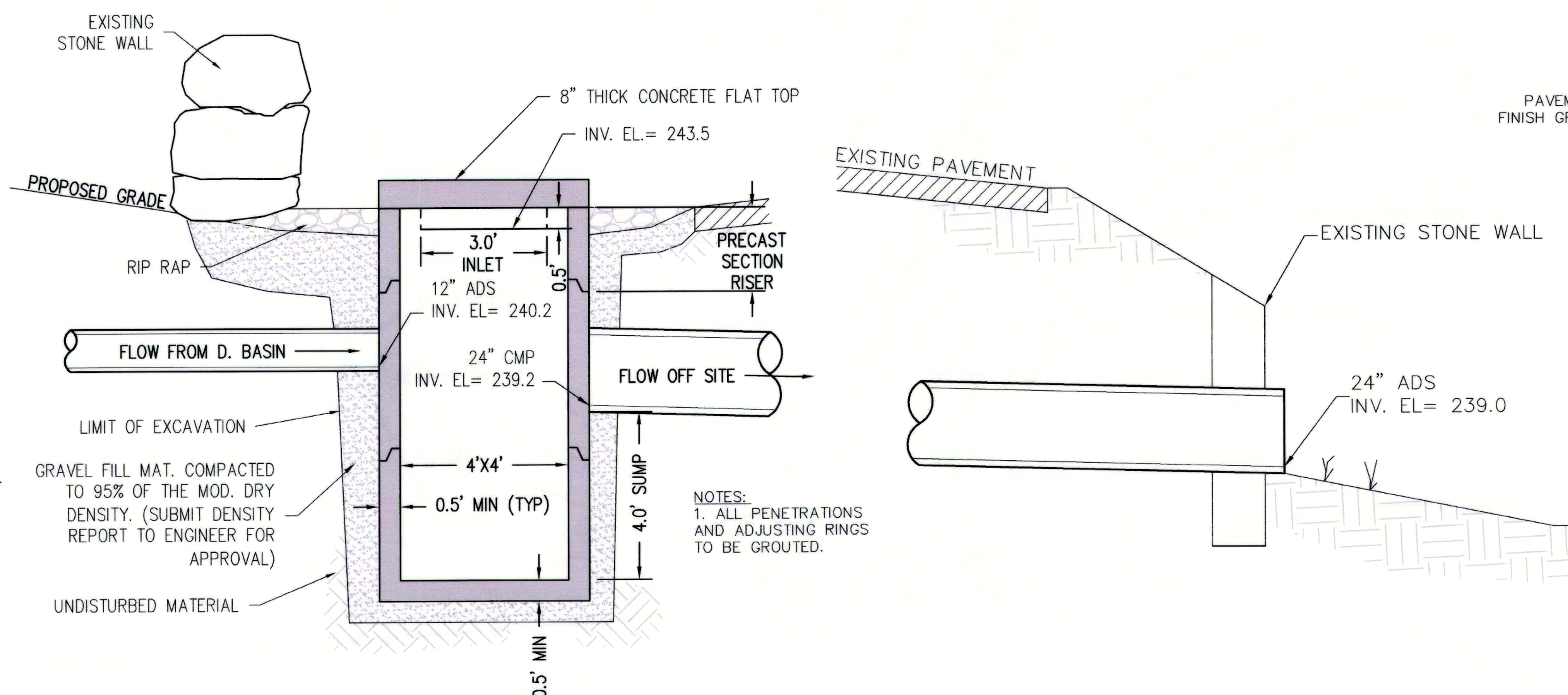

CB-3 DROP INLET WITH COVER AND CULVERT

NOT TO SCALE

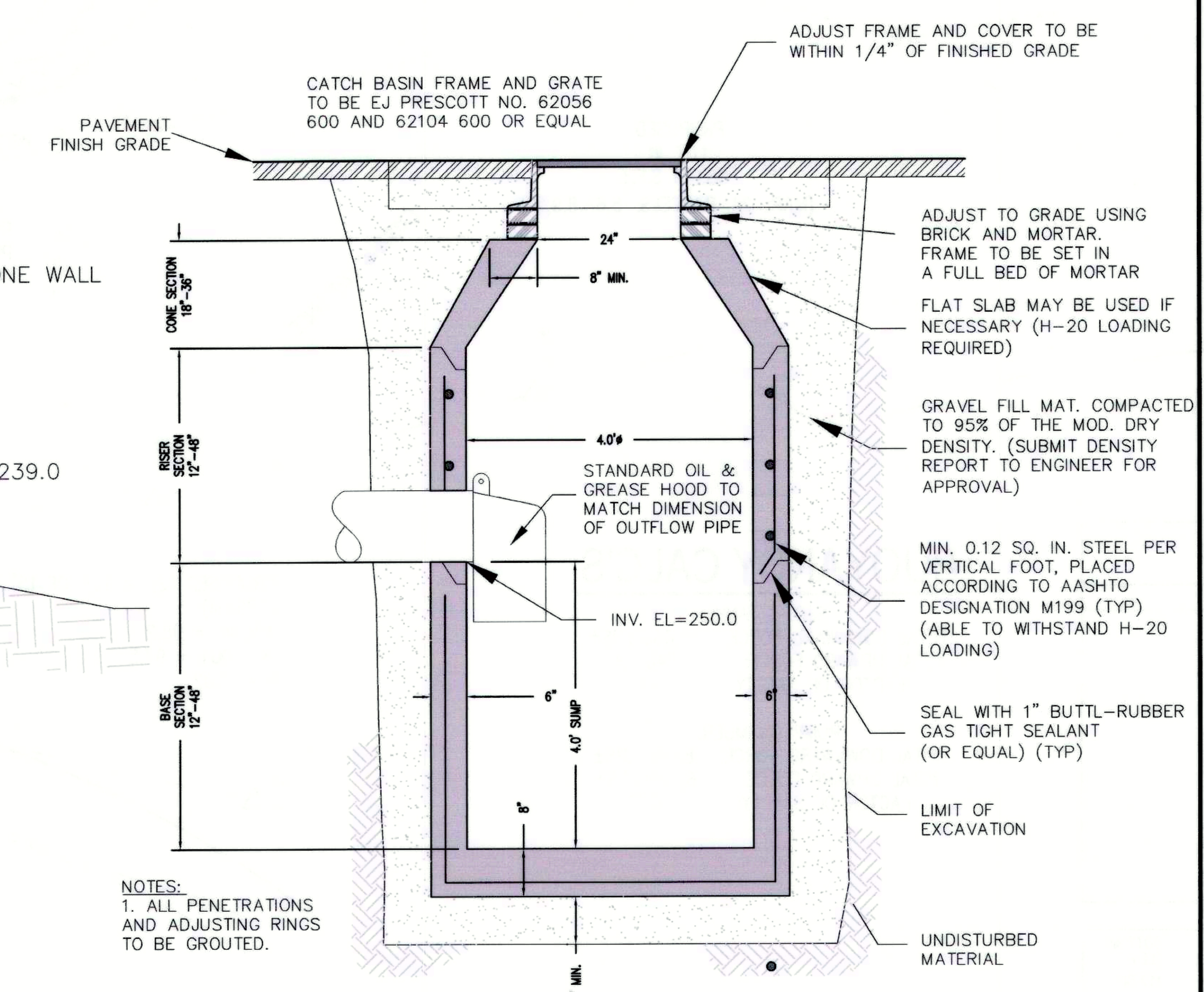

CB-5 DEEP SUMP CONCRETE CATCH BASIN

NOT TO SCALE

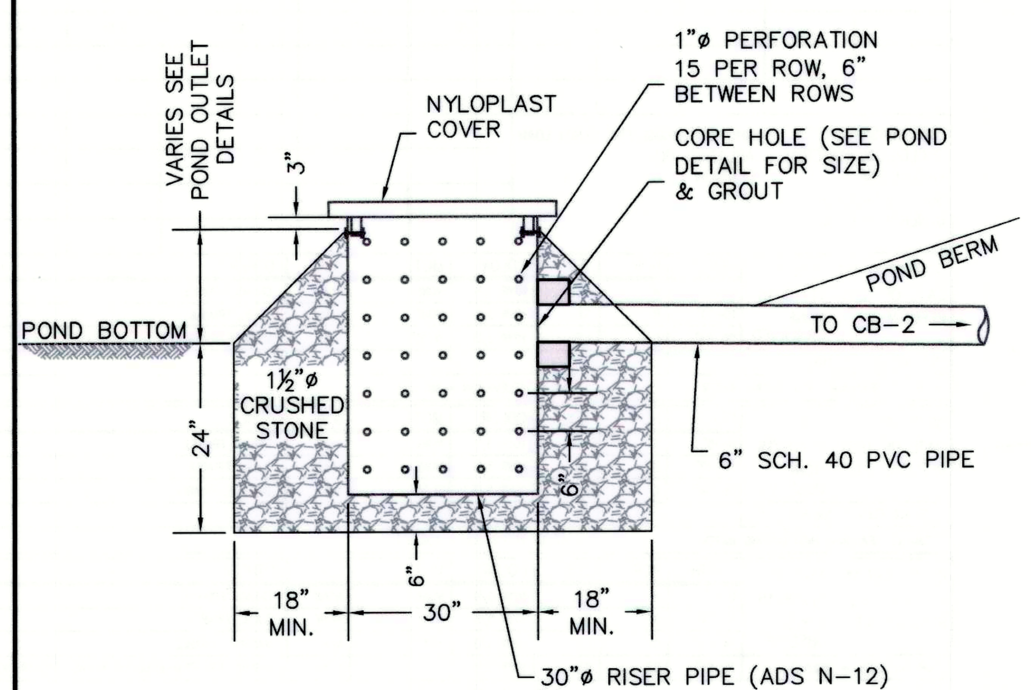

RISER DETAIL

SCALE: 1"=2'

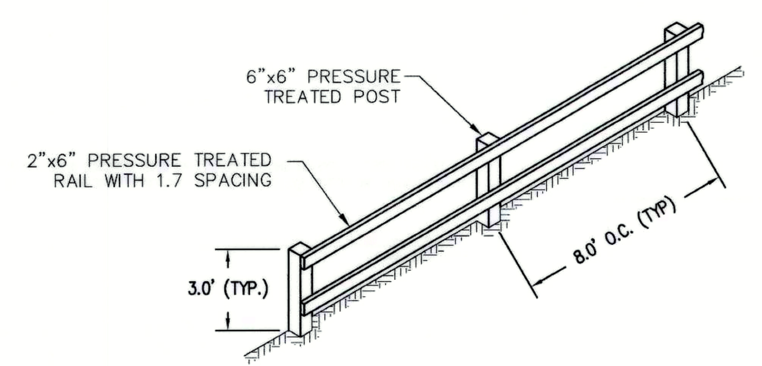

WOODEN GUARDRAIL DETAIL

NOT TO SCALE

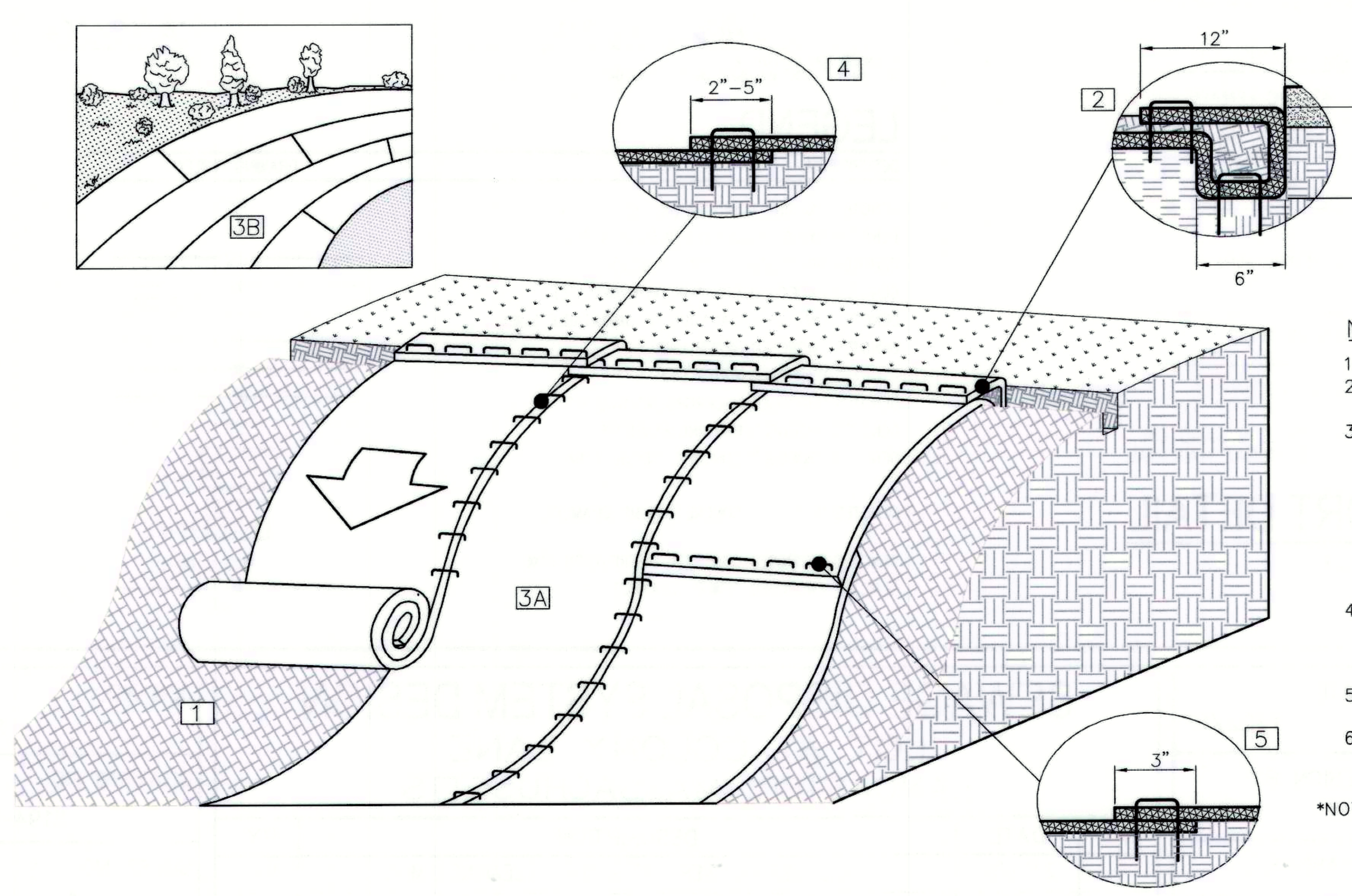

NOTES:

1. EROSION CONTROL BLANKETS SHALL BE INSTALLED ON ALL SLOPES 3:1 OR GREATER.
2. PREPARE SOIL AND HYDROSEED (WITH MULCH & TACKIFIER) BEFORE INSTALLING ROLLED EROSION CONTROL PRODUCTS (RECPS).
3. BEGIN AT THE TOP OF THE SLOPE BY ANCHORING THE RECPS IN A 6" DEEP X 6" WIDE TRENCH WITH APPROXIMATELY 12" OF RECPS EXTENDED BEYOND THE UP-SLOPE PORTION OF THE TRENCH. ANCHOR THE RECPS WITH A ROW OF STAPLES/STAKES APPROXIMATELY 12" APART IN THE BOTTOM OF THE TRENCH. BACKFILL AND COMPACT THE TRENCH AFTER STAPLING. APPLY ADDITIONAL SEED TO THE COMPACTED SOIL AND FOLD THE REMAINING 12" PORTION OF RECPS BACK OVER THE SEED AND COMPACTED SOIL. SECURE RECPS OVER COMPACTED SOIL WITH A ROW OF STAPLES/STAKES SPACED APPROXIMATELY 12" APART ACROSS THE WIDTH OF THE RECPS.
4. ROLL THE RECPS (A) DOWN OR (B) HORIZONTALLY ACROSS THE SLOPE. RECPS WILL UNROLL WITH APPROPRIATE SIDE AGAINST THE SOIL SURFACE. ALL RECPS MUST BE SECURELY FASTENED TO SOIL SURFACE BY PLACING STAPLES/STAKES IN APPROPRIATE LOCATIONS AS SHOWN IN THE STAPLE PATTERN GUIDE.
5. THE EDGES OF PARALLEL RECPS MUST BE STAPLED WITH APPROXIMATELY 2"-5" OVERLAP DEPENDING ON THE RECPS TYPE.
6. CONSECUTIVE RECPS SPLICED DOWN THE SLOPE MUST BE END OVER END (SHINGLE STYLE) WITH AN APPROXIMATE 3" OVERLAP. STAPLE THROUGH OVERLAPPED AREA, APPROXIMATELY 12" APART ACROSS ENTIRE RECPS WIDTH.

*NOTE:
IN LOOSE SOIL CONDITIONS, THE USE OF STAPLE OR STAKE LENGTHS GREATER THAN 6" MAY BE NECESSARY TO PROPERLY SECURE THE RECP'S.

EROSION CONTROL BLANKET

NOT TO SCALE

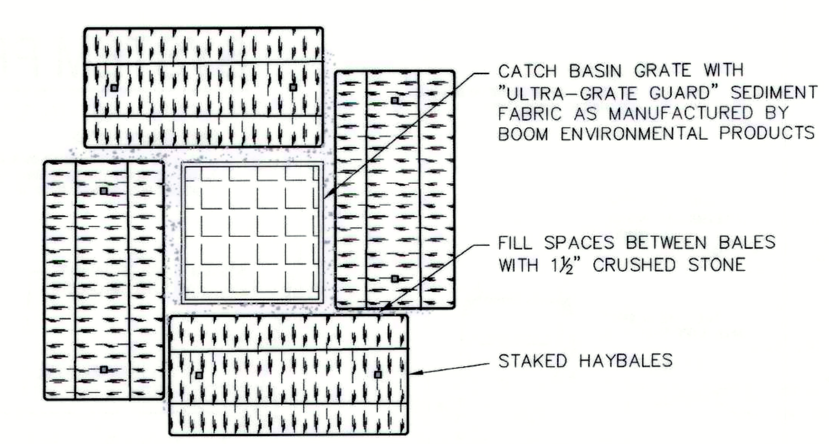

PLAN VIEW

NOT TO SCALE

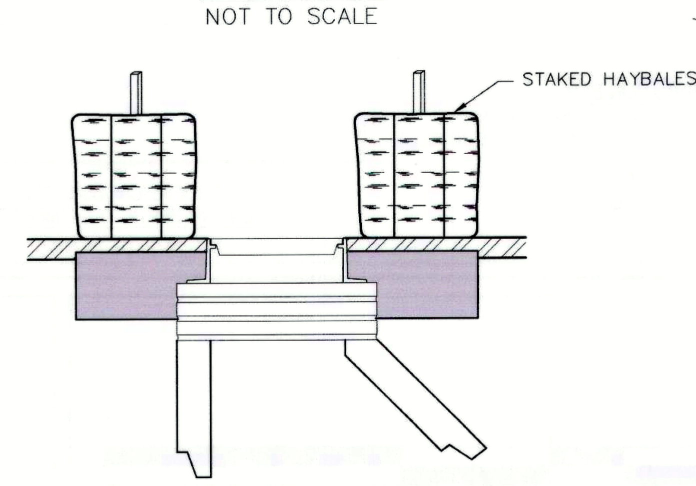

CATCH BASIN SEDIMENT TRAP

NOT TO SCALE

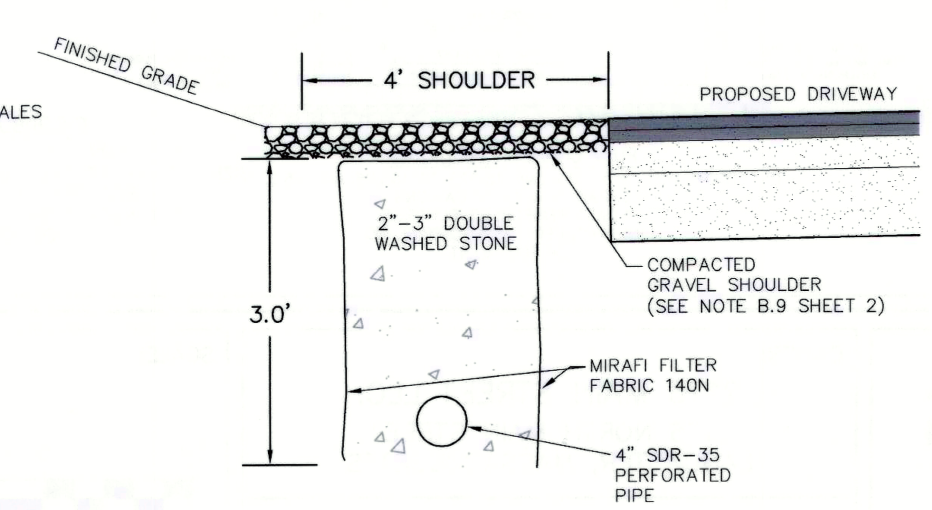

INTERCEPTOR DRAIN

COPYRIGHT DUCHARME & DILLIS CIVIL DESIGN GROUP, INC 2017

COMMONWEALTH OF MASSACHUSETTS
GREGORY S. ROY CIVIL NO. 46070 REGISTERED PROFESSIONAL ENGINEER
1/12/17
PROFESSIONAL ENGINEER

COMMONWEALTH OF MASSACHUSETTS
STANLEY R. DILLIS 33182 PROFESSIONAL LAND SURVEYOR
1/12/17
PROFESSIONAL LAND SURVEYOR

I CERTIFY THIS PLAN CONFORMS TO THE RULES AND REGULATIONS OF THE REGISTERS OF DEEDS OF THE COMMONWEALTH OF MASSACHUSETTS

RESERVED FOR REGISTRY USE

APPROVAL REQUIRED UNDER THE SUBDIVISION CONTROL LAW
DATE APPROVED: ____________________

____________________)
____________________)
____________________)
____________________) BEING A MAJORITY OF THE STOW PLANNING BOARD
____________________)
____________________)
____________________)

DATE ENDORSED: ____________________

APPROVED SUBJECT TO CONDITIONS SET FORTH
IN A COVENANT EXECUTED BY ____________________
DATED ____________________ AND TO BE RECORDED HEREWITH

NO BUILDING OR STRUCTURE SHALL BE BUILT OR PLACED ON ANY LOT WITHOUT A PERMIT FROM THE BOARD OF HEALTH

I, ____________________, CLERK OF THE TOWN OF STOW
HEREBY CERTIFY THAT THE NOTICE OF THE APPROVAL OF THIS PLAN BY THE PLANNING BOARD HAS BEEN RECEIVED AND RECORDED BY THIS OFFICE AND NO APPEAL WAS RECEIVED DURING THE TWENTY (20) DAYS NEXT AFTER RECEIPT AND RECORDING OF SAID NOTICE.

STOW TOWN CLERK DATE

ZONING CLASSIFICATION: **RESIDENTIAL (RES)**

HAMMERHEAD LOTS:

FRONTAGE	= 50'	SETBACKS: FRONT	= 50'
LOT AREA	= 180,000 SQ. FT.	SIDE	= 45'
OPEN SPACE (MIN.)	= 10%	REAR	= 40'
FLOOR AREA RATIO	= NR	LOT SHAPE (MIN.)	= 0.25

CONVENTIONAL LOTS:

FRONTAGE	= 200'	SETBACKS: FRONT	= 30'
LOT AREA	= 65,340 SQ. FT.	SIDE	= 25'
OPEN SPACE (MIN.)	= 10%	REAR	= 40'
FLOOR AREA RATIO	= NR	LOT SHAPE (MIN.)	= 0.40

OWNER: **RICHARD F. RIEL, 113 WALCOTT STREET, STOW, MA 01775**
APPLICANT: **ROBERT VISCO, 30 OLD STOW ROAD, HUDSON, MA 01749**

BOOK/PAGE: **BOOK 13501, PAGE 418**
MAP/PARCEL: **MAP R-1, PARCEL 31**

JILLIAN'S LANE
DEFINITIVE SUBDIVISION DEVELOPMENT
STOW, MASSACHUSETTS
DETAIL SHEET

NO.	DATE	DESCRIPTION	BY
2	7/7/16	REVISED PER PLANNING BOARD COMMENTS	PJW
3	8/24/16	REVISED PER PLANNING BOARD DECISION	PJW
4	9/27/16	REVISED DRIVEWAY LOCATION	PJW
5	12/6/16	REVISED PER PLANNING BOARD COMMENTS	PJW
6	1/12/17	REVISED PER PLANNING BOARD DECISION	PJW

PREPARED BY:
DUCHARME & DILLIS
Civil Design Group, Inc.
CIVIL ENGINEERS• LAND SURVEYORS• WETLAND CONSULTANTS
1092 MAIN STREET, P.O. BOX 428
BOLTON, MASSACHUSETTS 01740
PHONE: (978) 779-6091 FAX: (978) 779-0260
www.DucharmeandDillis.com

DESIGN BY:	DRAWN BY:	CHECKED BY:	SHEET NO.
GSR	GSR	GSR	10 OF 11
DATE: 3/18/16	JOB NUMBER: 5139	DRAWING NO. 5139-DET	

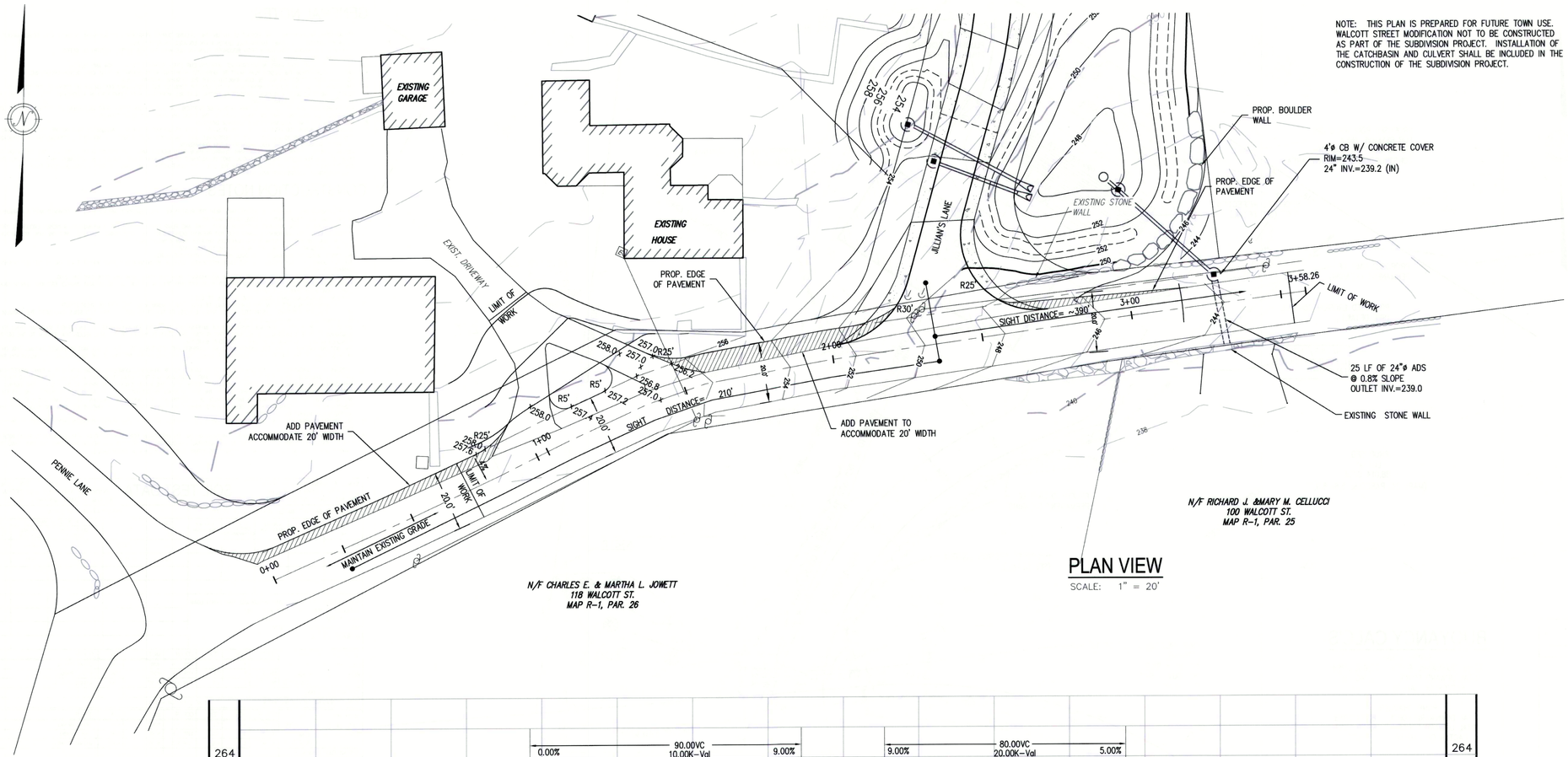

NOTE: THIS PLAN IS PREPARED FOR FUTURE TOWN USE. WALCOTT STREET MODIFICATION NOT TO BE CONSTRUCTED AS PART OF THE SUBDIVISION PROJECT. INSTALLATION OF THE CATCHBASIN AND CULVERT SHALL BE INCLUDED IN THE CONSTRUCTION OF THE SUBDIVISION PROJECT.

PLAN VIEW

SCALE: 1" = 20'

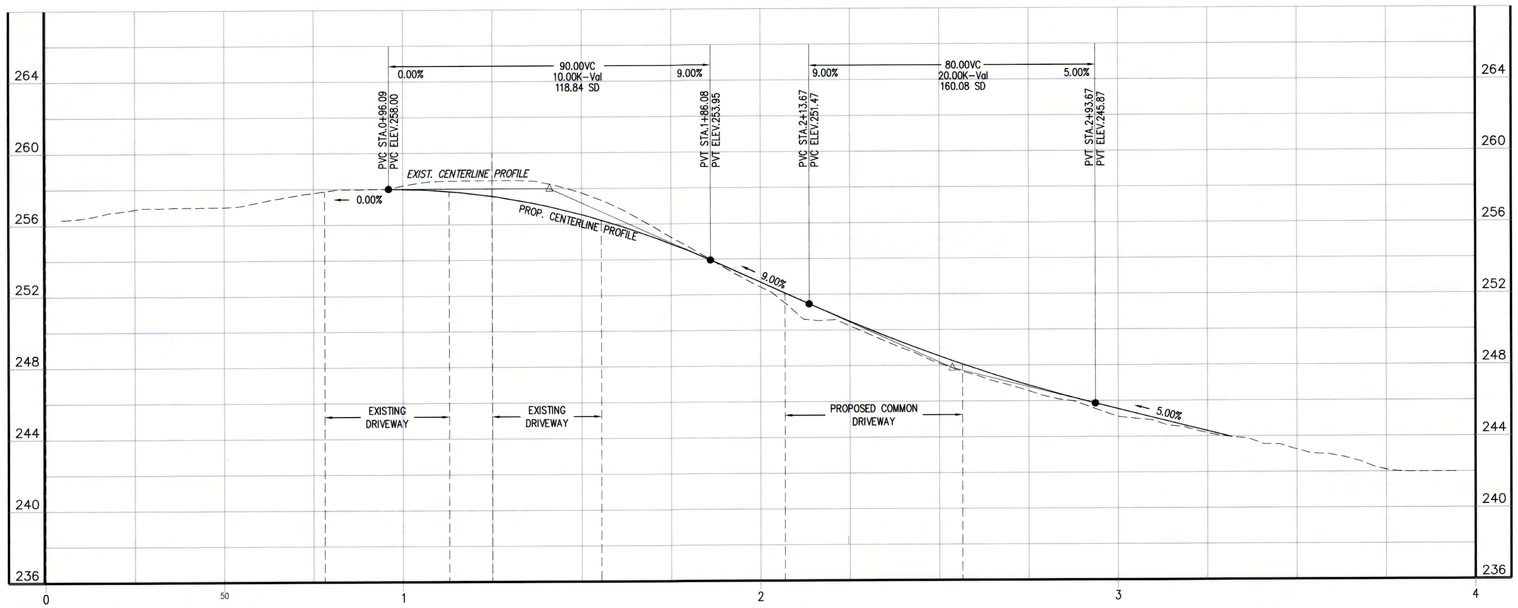

PROFILE

SCALE: 1" = 20' (HOR.)
1" = 4' (VERT.)

1 in. = 20 ft.

COPYRIGHT DUCHARME & DILLIS CIVIL DESIGN GROUP, INC 2017

PROFESSIONAL ENGINEER — 1/12/17

PROFESSIONAL LAND SURVEYOR — 1/12/17

I CERTIFY THIS PLAN CONFORMS TO THE RULES AND REGULATIONS OF THE REGISTERS OF DEEDS OF THE COMMONWEALTH OF MASSACHUSETTS

RESERVED FOR REGISTRY USE

APPROVAL REQUIRED UNDER THE SUBDIVISION CONTROL LAW
DATE APPROVED: _____

_____)
_____)
_____)
_____) BEING A MAJORITY OF THE STOW PLANNING BOARD
_____)
_____)
_____)

DATE ENDORSED: _____

APPROVED SUBJECT TO CONDITIONS SET FORTH IN A COVENANT EXECUTED BY _____
DATED _____ AND TO BE RECORDED HEREWITH

NO BUILDING OR STRUCTURE SHALL BE BUILT OR PLACED ON ANY LOT WITHOUT A PERMIT FROM THE BOARD OF HEALTH

I, _____, CLERK OF THE TOWN OF STOW HEREBY CERTIFY THAT THE NOTICE OF THE APPROVAL OF THIS PLAN BY THE PLANNING BOARD HAS BEEN RECEIVED AND RECORDED BY THIS OFFICE AND NO APPEAL WAS RECEIVED DURING THE TWENTY (20) DAYS NEXT AFTER RECEIPT AND RECORDING OF SAID NOTICE.

STOW TOWN CLERK — DATE

ZONING CLASSIFICATION: **RESIDENTIAL (RES)**

HAMMERHEAD LOTS:

FRONTAGE	= 50'	SETBACKS: FRONT	= 50'
LOT AREA	= 180,000 SQ. FT.	SIDE	= 45'
OPEN SPACE (MIN.)	= 10%	REAR	= 40'
FLOOR AREA RATIO	= NR	LOT SHAPE (MIN.)	= 0.25

CONVENTIONAL LOTS:

FRONTAGE	= 200'	SETBACKS: FRONT	= 30'
LOT AREA	= 65,340 SQ. FT.	SIDE	= 25'
OPEN SPACE (MIN.)	= 10%	REAR	= 40'
FLOOR AREA RATIO	= NR	LOT SHAPE (MIN.)	= 0.40

OWNER: **RICHARD F. RIEL**
113 WALCOTT STREET
STOW, MA 01775

APPLICANT: **ROBERT VISCO**
30 OLD STOW ROAD
HUDSON, MA 01749

BOOK/PAGE:
BOOK 13501, PAGE 418

MAP/PARCEL:
MAP R-1, PARCEL 31

JILLIAN'S LANE
DEFINITIVE SUBDIVISION DEVELOPMENT
STOW, MASSACHUSETTS
ROAD IMPROVEMENT PLAN

NO.	DATE	DESCRIPTION	BY
1	8/24/16	ADDED SHEET TO SET PER PLANNING BOARD DECISION	PJW
2	9/27/16	REVISED DRIVEWAY LOCATION	PJW
3	12/6/16	REVISED PER PLANNING BOARD COMMENTS	PJW
4	1/12/17	REVISED PER PLANNING BOARD DECISION	PJW

PREPARED BY:

DUCHARME & DILLIS
Civil Design Group, Inc.
CIVIL ENGINEERS• LAND SURVEYORS• WETLAND CONSULTANTS
1092 MAIN STREET, P.O. BOX 428
BOLTON, MASSACHUSETTS 01740
PHONE: (978) 779-6091 FAX: (978) 779-0260
www.DucharmeandDillis.com

DESIGN BY:	DRAWN BY:	CHECKED BY:	SHEET NO.
GSR	PJW	GSR	11
DATE: 7/07/16	JOB NUMBER: 5139	DRAWING NO. 5139-IMPROV	OF 11